TOYOTA

CAMRY

ELECTRICAL WIRING DIAGRAM

MCV20
SXV20 Series

Aug., 1996

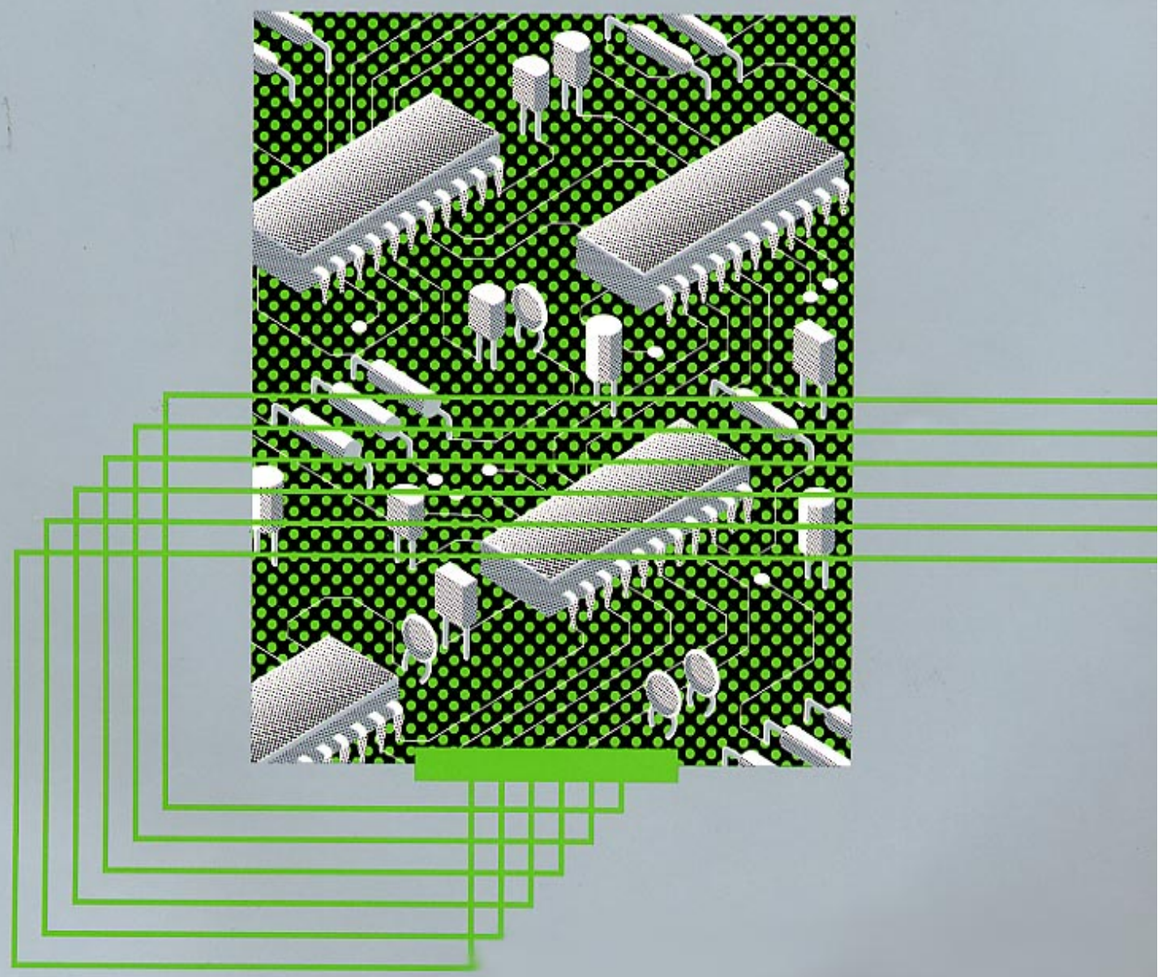

FOREWORD

This wiring diagram manual has been prepared to provide information on the electrical system of the CAMRY.

Applicable models: MCV20 Series
SXV20 Series

For service specifications and repair procedures of the above models other than those listed in this manual, refer to the following manuals;

Manual Name	Pub. No.
● CAMRY Chassis and Body Repair Manual	RM536E
● 1MZ-FE Engine Repair Manual Supplement	RM550E
● 5S-FE Engine Repair Manual Supplement	RM547E
● CAMRY New Car Features	NCF136E

All information in this manual is based on the latest product information at the time of publication. However, specifications and procedures are subject to change without notice.

TOYOTA MOTOR CORPORATION

English
Français
Español

NOTICE

When handling supplemental restraint system components (removal, installation or inspection, etc.), always follow the direction given in the repair manuals listed above to prevent accidents and supplemental restraint system malfunction.

CAMRY
ELECTRICAL WIRING DIAGRAM

(English)

	Section No.	Page
INTRODUCTION	A	2
HOW TO USE THIS MANUAL	B	3
TROUBLESHOOTING	C	10
ABBREVIATIONS	D	15
GLOSSARY OF TERMS AND SYMBOLS	E	16
RELAY LOCATIONS	F	50
ELECTRICAL WIRING ROUTING	G	60
POWER SOURCE(Current Flow Chart)	H	104
SYSTEM CIRCUITS	I	113
GROUND POINTS	J	430
OVERALL ELECTRICAL WIRING DIAGRAM	K	444

English
Français
Español

SCHEMA DE CABLAGE ELECTRIQUE DE LA CAMRY

(Français)

	N° de section	*Page*
INTRODUCTION	*A*	*18*
COMMENT UTILISER CE MANUEL	*B*	*19*
DEPANNAGE	*C*	*26*
ABREVIATIONS	*D*	*31*
GLOSSAIRE DES TERMES ET SYMBOLES	*E*	*32*
EMPLACEMENTS DES RELAIS	*F*	*50*
ACHEMINEMENT DES FILS ELECTRIQUES	*G*	*60*
SOURCE D'ALIMENTATION(Schéma de Courant)	*H*	*104*
CIRCUITS DU SYSTEME	*I*	*114*
POINTS DE MISE A LA TERRE	*J*	*430*
SCHÉMA GÉNÉRAL DE CÂBLAGE ÉLECTRIQUE	*K*	*446*

CAMRY
DIAGRAMA DEL CABLEADO ELECTRICO

(Español)

	Sección N°	*Página*
INTRODUCCION	*A*	*34*
COMO UTILIZAR ESTE MANUAL	*B*	*35*
LOCALIZACION DE AVERIAS	*C*	*42*
ABREVIATURAS	*D*	*47*
GLOSARIO DE TERMINOS Y SIMBOLOS	*E*	*48*
UBICACION DE LOS RELES	*F*	*50*
UBICACION DE LOS CABLES	*G*	*60*
FUENTE DE ALIMENTACION(Cuadro de flujo de corriente)	*H*	*104*
CIRCUITOS DE SISTEMAS	*I*	*115*
PUNTOS DE CONEXION A MASA	*J*	*430*
DIAGRAMA DE CONEXIONES ELECTRICAS GENERAL	*K*	*448*

©1997 **TOYOTA MOTOR CORPORATION**
All rights reserved. This book may not be reproduced or copied, in whole or in part, without the written permission of Toyota Motor Corporation.

©1997 **TOYOTA MOTOR CORPORATION**
Tous droits réservés. Cette publication ne peut être reproduite, copiée, en totalité ou en partie, sans l'autorisation écrite de Toyota Motor Corporation.

©1997 **TOYOTA MOTOR CORPORATION**
Reservados todos los d3erechos. Prohibida la reproduccion o copia, total o parcial, de este libro, sin autorización.

This manual consists of the following 11 sections:

No.	Section	Description
A	INDEX	Index of the contents of this manual.
	INTRODUCTION	Brief explanation of each section.
B	HOW TO USE THIS MANUAL	Instructions on how to use this manual.
C	TROUBLE-SHOOTING	Describes the basic inspection procedures for electrical circuits.
D	ABBREVIATIONS	Defines the abbreviations used in this manual.
E	GLOSSARY OF TERMS AND SYMBOLS	Defines the symbols and functions of major parts.
F	RELAY LOCATIONS	Shows position of the Electronic Control Unit, Relays, Relay Block, etc. This section is closely related to the system circuit.
G	ELECTRICAL WIRING ROUTING	Describes position of Parts Connectors, Splice points, Ground points, etc. This section is closely related to the system circuit.
H	POWER SOURCE (Current Flow Chart)	Describes power distribution from the power supply to various electrical loads.
I	INDEX	Index of the system circuits.
	SYSTEM CIRCUITS	Electrical circuits of each system are shown from the power supply through ground points. Wiring connections and their positions are shown and classified by code according to the connection method. (Refer to the section, "How to use this manual"). The "System Outline" and "Service Hints" useful for troubleshooting are also contained in this section.
J	GROUND POINTS	Shows ground positions of all parts described in this manual.
K	OVERALL ELECTRICAL WIRING DIAGRAM	Provides circuit diagrams showing the circuit connections.

This manual provides information on the electrical circuits installed on vehicles by dividing them into a circuit for each system.

The actual wiring of each system circuit is shown from the point where the power source is received from the battery as far as each ground point. (All circuit diagrams are shown with the switches in the OFF position.)

When troubleshooting any problem, first understand the operation of the circuit where the problem was detected (see System Circuit section), the power source supplying power to that circuit (see Power Source section), and the ground points (see Ground Points section). See the System Outline to understand the circuit operation.

When the circuit operation is understood, begin troubleshooting of the problem circuit to isolate the cause. Use Relay Location and Electrical Wiring Routing sections to find each part, junction block and wiring harness connectors, wiring harness and wiring harness connectors, splice points, and ground points of each system circuit. Internal wiring for each junction block is also provided for better understanding of connection within a junction block.
Wiring related to each system is indicated in each system circuit by arrows (from___, to___). When overall connections are required, see the Overall Electrical Wiring Diagram at the end of this manual.

* The system shown here is an EXAMPLE ONLY. It is different to the actual circuit shown in the SYSTEM CIRCUITS SECTION.

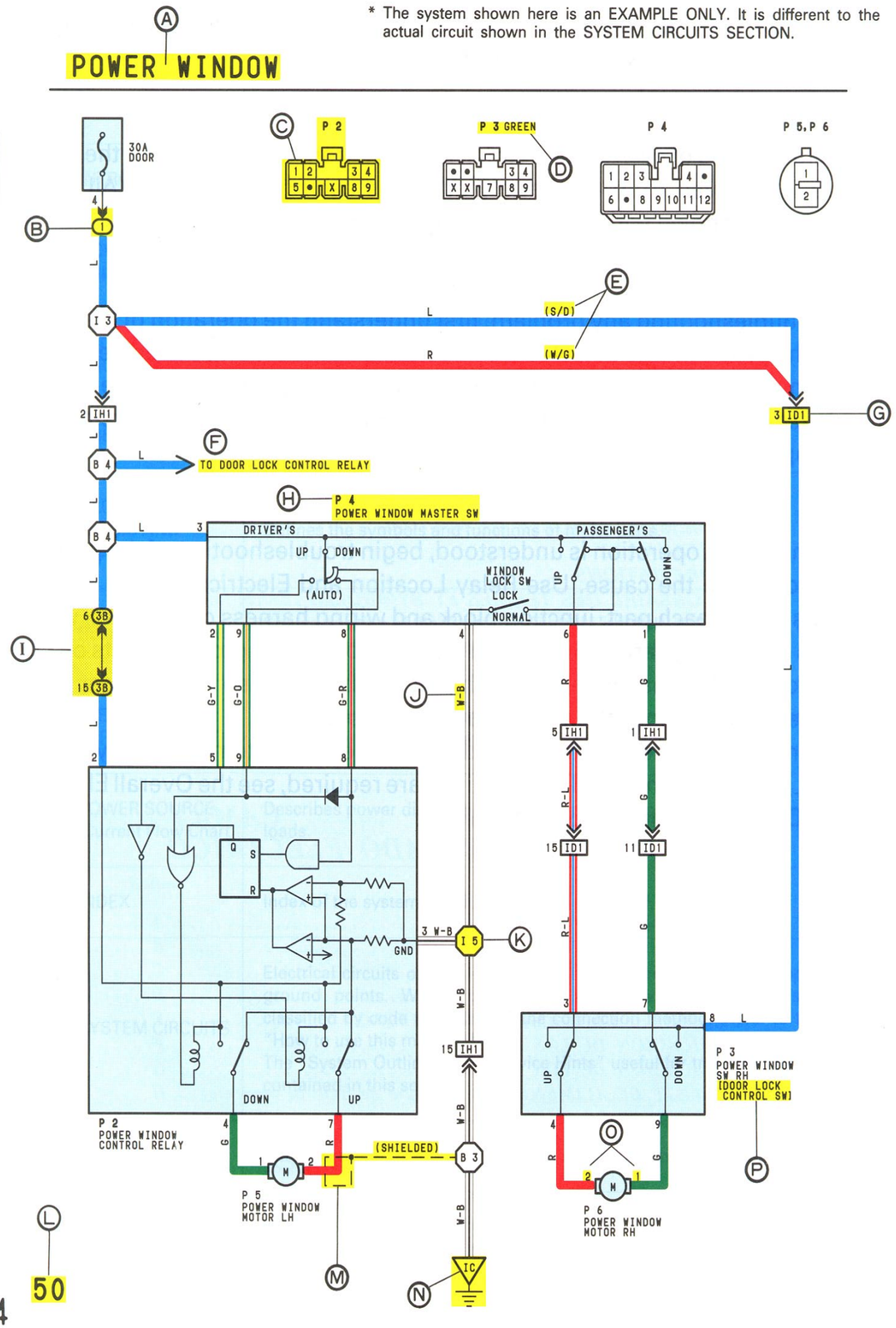

Ⓐ: System Title

Ⓑ: Indicates a Relay Block. No shading is used and only the Relay Block No. is shown to distinguish it from the J/B.

Example: ① Indicates Relay Block No. 1.

Ⓒ: Indicates the connector to be connected to a part (the numeral indicates the pin No.)

Explanation of pin use.

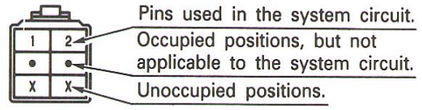

The pins shown are only for the highest grade, or only include those in the specification.

Ⓓ: Connector Color
Connectors not indicated are milky white in color.

Ⓔ: ( ) is used to indicate different wiring and connector, etc. when the vehicle model, engine type, or specification is different.

Ⓕ: Indicates related system.

Ⓖ: Indicates the wiring harness and wiring harness connector. The wiring harness with male terminal is shown with arrows (⩔). Outside numerals are pin numbers.

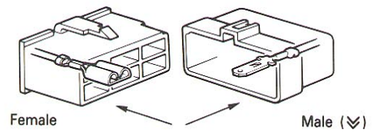

The first letter of the code for each wiring harness and wiring harness connector(s) indicates the component's location, e.g, "E" for the Engine Compartment, "I" for the Instrument Panel and Surrounding area, and "B" for the Body and Surrounding area.

When more than one code has the first and second letters in common, followed by numbers (e.g, IH1, IH2), this indicates the same type of wiring harness and wiring harness connector.

Ⓗ: Represents a part (all parts are shown in sky blue). The code is the same as the code used in parts position.

Ⓘ: Junction Block (The number in the circle is the J/B No. and the connector code is shown beside it). Junction Blocks are shaded to clearly separate them from other parts (different junction blocks are shaded differently for further clarification).

Example:

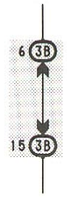

3B indicates that it is inside Junction Block No. 3.

Ⓙ: Indicates the wiring color.

Wire colors are indicated by an alphabetical code.

B	= Black	L	= Blue	R	= Red
BR	= Brown	LG	= Light Green	V	= Violet
G	= Green	O	= Orange	W	= White
GR	= Gray	P	= Pink	Y	= Yellow

The first letter indicates the basic wire color and the second letter indicates the color of the stripe.

Example: L – Y

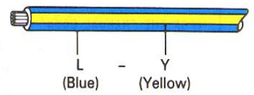

Ⓚ: Indicates a wiring Splice Point (Codes are "E" for the Engine Room, "I" for the Instrument Panel, and "B" for the Body).

Example:

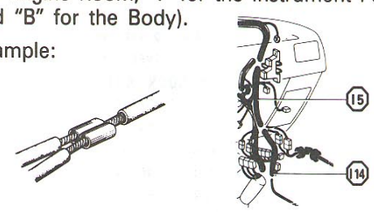

The Location of Splice Point I 5 is indicated by the shaded section.

Ⓛ: Page No.

Ⓜ: Indicates a shielded cable.

Ⓝ: Indicates a ground point.

The first letter of the code for each ground point(s) indicates the component's location, e.g, "E" for the Engine Compartment, "I" for the Instrument Panel and Surrounding area, and "B" for the Body and Surrounding area.

Ⓞ: Indicates the pin number of the connector. The numbering system is different for female and male connectors.

Example: Numbered in order from upper left to lower right — Numbered in order from upper right to lower left

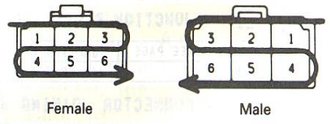

Ⓟ: When 2 parts both use one connector in common, the parts connector name used in the wire routing section is shown in square brackets [ ].

Ⓠ

SYSTEM OUTLINE

WITH THE IGNITION SW TURNED ON, THE CURRENT FLOWS TO TERMINAL 3 OF THE POWER WINDOW MASTER SW, TERMINAL 2 OF THE POWER WINDOW CONTROL RELAY AND TERMINAL 6 OF THE POWER WINDOW SW THROUGH THE DOOR FUSE.

1. DRIVER'S WINDOW "MANUAL UP" OPERATION BY MASTER SW

HOLDING MANUAL SW(DRIVER'S) ON "UP" POSITION LOCATED IN POWER WINDOW MASTER SW, THE CURRENT FLOWS TO TERMINAL 5 OF THE POWER WINDOW CONTROL RELAY THROUGH TERMINAL 3 OF THE MASTER SW → TERMINAL 2 TO OPERATE A POWER WINDOW CONTROL RELAY. THUS THE CURRENT INSIDE THE RELAY FLOWS FROM TERMINAL 2 OF THE RELAY → TERMINAL 1 → TERMINAL 2 OF THE POWER WINDOW MOTOR → TERMINAL 1 → TERMINAL 4 OF THE RELAY → TERMINAL 3 → TO GROUND. THE MOTOR TURNS TO ASCENT THE WINDOW. RELEASING THIS SW, THE ROTATION OF MOTOR IS STOPPED AND THE WINDOWS CAN STOP AT WILL POINT.
(FOR THE "MANUAL DOWN" OPERATION, CURRENT FLOWS IN THE REVERSE DIRECTION BECAUSE THE TERMINALS WHERE IT FLOWS ARE CHANGED).

2. DRIVER'S WINDOW "AUTO DOWN" OPERATION BY MASTER SW

ONCE THE "AUTO DOWN" BUTTON OF THE MASTER SW IS PUSHED, THE CURRENT FLOWS TERMINAL 9 OF THE POWER WINDOW CONTROL RELAY THROUGH TERMINAL 3 OF THE MASTER SW → TERMINALS 8 AND 9 TO OPERATE THE RELAY. THUS THE CURRENT INSIDE THE POWER WINDOW CONTROL RELAY FLOWS FROM TERMINAL 2 OF THE RELAY → TERMINAL 4 → TERMINAL 1 OF THE POWER WINDOW MOTOR → TERMINAL 2 → TERMINAL 1 OF THE RELAY → TERMINAL 3 → TO GROUND. THE MOTOR CONTINUES THE ROTATION ENABLING TO DESCENT THE WINDOW.
THE WINDOW DESCENDS TO THE END POSITION, THE CURRENT WILL BE CUT OFF TO RELEASE THE AUTO DOWN FUNCTION BASED ON THE INCREASING CURRENT BETWEEN TERMINAL 2 OF THE RELAY AND TERMINAL 1 IN RELAY.

3. DRIVER'S WINDOW AUTO DOWN RELEASE OPERATION BY MASTER SW

HOLDING THE MANUAL SW(DRIVER'S) ON "UP" POSITION IN OPERATING AUTO DOWN, THE CURRENT FROM TERMINAL 3 OF THE MASTER SW PASSING TERMINAL 2 FLOWS TERMINAL 5 OF THE RELAY AND RELEASES THE AUTO DOWN FUNCTION IN THE POWER WINDOW CONTROL RELAY. RELEASING THE HAND FROM SW, WINDOW STOPS AND CONTINUING ON TOUCHING SW, THE FUNCTION SWITCHES TO MANUAL UP OPERATION.

4. PASSENGER'S WINDOW UP OPERATION(MASTER SW) AND WINDOW LOCK SW OPERATION

HOLDING PASSENGER'S WINDOW SW(MASTER SW) ON "UP", THE CURRENT FLOWS FROM TERMINAL 3 OF THE MASTER SW PASSING TERMINAL 6 TO TERMINAL 3 OF THE POWER WINDOW SW(PASSENGER'S) → TERMINAL 4 → TERMINAL 2 OF THE MOTOR → TERMINAL 1 → TERMINAL 9 OF THE POWER WINDOW SW → TERMINAL 7 → TERMINAL 1 OF THE MASTER SW → TERMINAL 4 TO GROUND. THE MOTOR RUNS TO ASCENT THE WINDOW. RELEASING THIS SW, THE ROTATION OF MOTOR IS STOPPED AND WINDOW CAN STOP AT WILL PLACE.
SWITCHING THE WINDOW LOCK SW IN "LOCK" POSITION, THE CIRCUIT IS OPENED AND STOPPED THE MOTOR ROTATION.
(FOR THE DOWN OPERATION, CURRENT FLOWS IN THE REVERSE DIRECTION BECAUSE THE TERMINALS WHERE IT FLOWS ARE CHANGED).

Ⓡ

SERVICE HINTS

P2 POWER WINDOW CONTROL RELAY

3-GROUND:ALWAYS CONTINUITY
2-GROUND:APPROX.12VOLTS WITH IGNITION SW AT **ON** POSITION
5-GROUND:APPROX.12VOLTS WITH IGNITION SW AT **ON** POSITION AND MASTER SW AT **UP** POSITION
8-GROUND:APPROX.12VOLTS WITH IGNITION SW AT **ON** POSITION AND MASTER SW AT **AUTO DOWN** POSITION
9-GROUND:APPROX.12VOLTS WITH IGNITION SW AT **ON** POSITION AND MASTER SW AT **DOWN** OR **AUTO DOWN** POSITION

P4 POWER WINDOW MASTER SW

4-GROUND:ALWAYS CONTINUITY
3-GROUND:APPROX.12VOLTS WITH IGNITION SW AT **ON** POSITION

WINDOW LOCK SW

OPEN WITH WINDOW LOCK SW AT **LOCK** POSITION

Ⓢ ○ : **PARTS LOCATION**

CODE	SEE PAGE	CODE	SEE PAGE	CODE	SEE PAGE
P2	21	P4	21	P6	21
P3	21	P5	21		

Ⓣ ⬭ : **RELAY BLOCKS**

CODE	SEE PAGE	RELAY BLOCK (RELAY BLOCK LOCATION)
1	16	R/B NO.1 (INSTRUMENT PANEL LEFT SIDE)

Ⓤ : **JUNCTION BLOCK AND WIRE HARNESS CONNECTOR**

CODE	SEE PAGE	JUNCTION BLOCK AND WIRE HARNESS (CONNECTOR LOCATION)
3B	14	J/B NO.3 AND COWL WIRE (INSTRUMENT PANEL LEFT SIDE)

Ⓥ □ : **CONNECTOR JOINING WIRE HARNESS AND WIRE HARNESS**

CODE	SEE PAGE	JOINING WIRE HARNESS AND WIRE HARNESS (CONNECTOR LOCATION)
ID1	26	FRONT DOOR RH WIRE AND COWL WIRE (RIGHT KICK PANEL)
IH1	26	FRONT DOOR LH WIRE AND COWL WIRE (LEFT KICK PANEL)

Ⓦ ▽ : **GROUND POINTS**

CODE	SEE PAGE	GROUND POINT LOCATION
IC	24	COWL LEFT

Ⓧ ⬡ : **SPLICE POINTS**

CODE	SEE PAGE	WIRE HARNESSES WITH SPLICE POINTS
I6	24	COWL WIRE

Ⓠ: Explains the system outline.

Ⓡ: Indicates values or explains the function for reference during troubleshooting.

Ⓢ: Indicates the reference page showing the position on the vehicle of the parts in the system circuit.
Example: Part "P4" (Power Window Master SW) is on page 21 of the manual.
* The letter in the code is from the first letter of the part, and the number indicates its order in parts starting with that letter.
Example: P4
Part is 4th in order
Power Window Master SW

Ⓣ: Indicates the reference page showing the position on the vehicle of Relay Block Connectors in the system circuit.
Example: Connector "1" is described on page 16 of this manual and is installed on the left side of the instrument panel.

Ⓤ: Indicates the reference page showing the position on the vehicle of J/B and Wire Harness in the system circuit.
Example: Connector "3B" connects the Cowl Wire and J/B No. 3. It is described on page 14 of this manual, and is installed on the instrument panel left side.

Ⓥ: Indicates the reference page describing the wiring harness and wiring harness connector (the female wiring harness is shown first, followed by the male wiring harness).
Example: Connector "ID1" connects the front door RH wire (female) and cowl wire (male). It is described on page 26 of this manual, and is installed on the right side kick panel.

Ⓦ: Indicates the reference page showing the position of the ground points on the vehicle.
Example: Ground point "IC" is described on page 24 of this manual and is installed on the cowl left side.

Ⓧ: Indicates the reference page showing the position of the splice points on the vehicle.
Example: Splice point "I 5" is on the Cowl Wire Harness and is described on page 24 of this manual.

HINT:

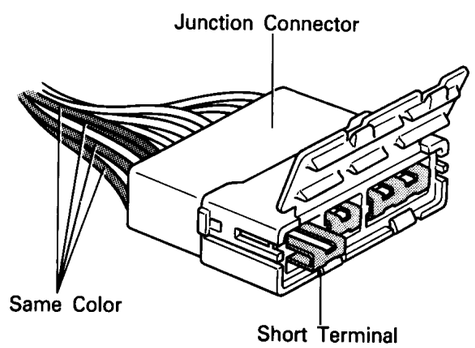

Junction connector (code: J1 to J47) in this manual include a short terminal which is connected to a number of wire harnesses. Always perform inspection with the short terminal installed. (When installing the wire harnesses, the harnesses can be connected to any position within the short terminal grouping. Accordingly, in other vehicles, the same position in the short terminal may be connected to a wire harness from a different part.)
Wire harness sharing the same short terminal grouping have the same color.

B HOW TO USE THIS MANUAL

The "Current Flow Chart" section, describes which parts each power source (fuses, fusible links, and circuit breakers) transmits current to. In the Power Source circuit diagram, the conditions when battery power is supplied to each system are explained. Since all System Circuit diagrams start from the power source, the power source system must be fully understood.

English

H POWER SOURCE (Current Flow Chart)

The chart below shows the route by which current flows from the battery to each electrical source (Fusible Link, Circuit Breaker, Fuse, etc.) and other parts.

The next page and following pages shown the parts to which each electrical source outputs current.

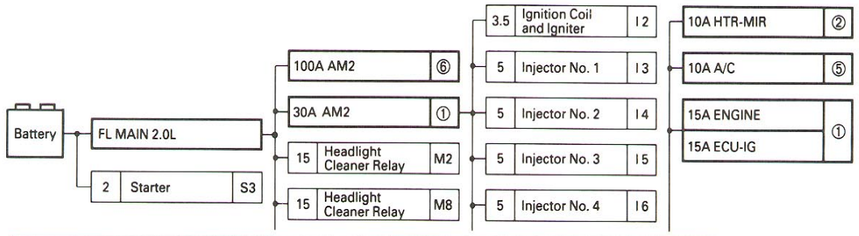

Location	Page Nos. of Related Systems	32	5	3	28	32	32	10	32	25	28	10	12	12	32	32	12	12	6	5	30	10	5
	Parts	A/C Idle-Up VSV	Air Flow Meter	Alternator	Auto Antenna Motor	A/C Amplifier	A/C SW	A/C SW Light	A/C Pressure SW	ADD Control Relay	Auto Antenna Control Relay	A/T Indicator Light	Back-Up Light SW	Back-Up Light Relay	Blower Motor	Blower Resistor	Back-Up Light LH	Back-Up Light RH	Choke Heater	Check Connector	Cigarette Lighter	Cigarette Lighter Light	Circuit Opening Relay
	Code or Location / CB or Fuse	A1	A4	A5	A7	A8	A9		A10	A11	A12	A13	B1	B3	B4	B5	R5	R6	C2	C3	C8	C8	C9
	10A ENGINE			●																			
	20A WIPER																						
	10A TURN																						
	10A GAUGE									●	●		●	●				●	●				

POWER SOURCE

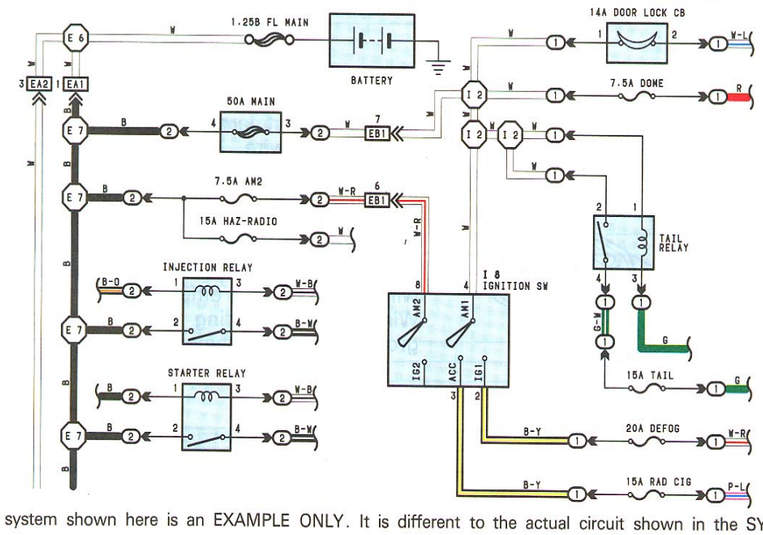

* The system shown here is an EXAMPLE ONLY. It is different to the actual circuit shown in the SYSTEM CIRCUITS SECTION

The ground points circuit diagram shows the connections from all major parts to the respective ground points. When troubleshooting a faulty ground point, checking the system circuits which use a common ground may help you identify the problem ground quickly. The relationship between ground points (EA, IB and IC shown below) can also be checked this way.

English

J GROUND POINT

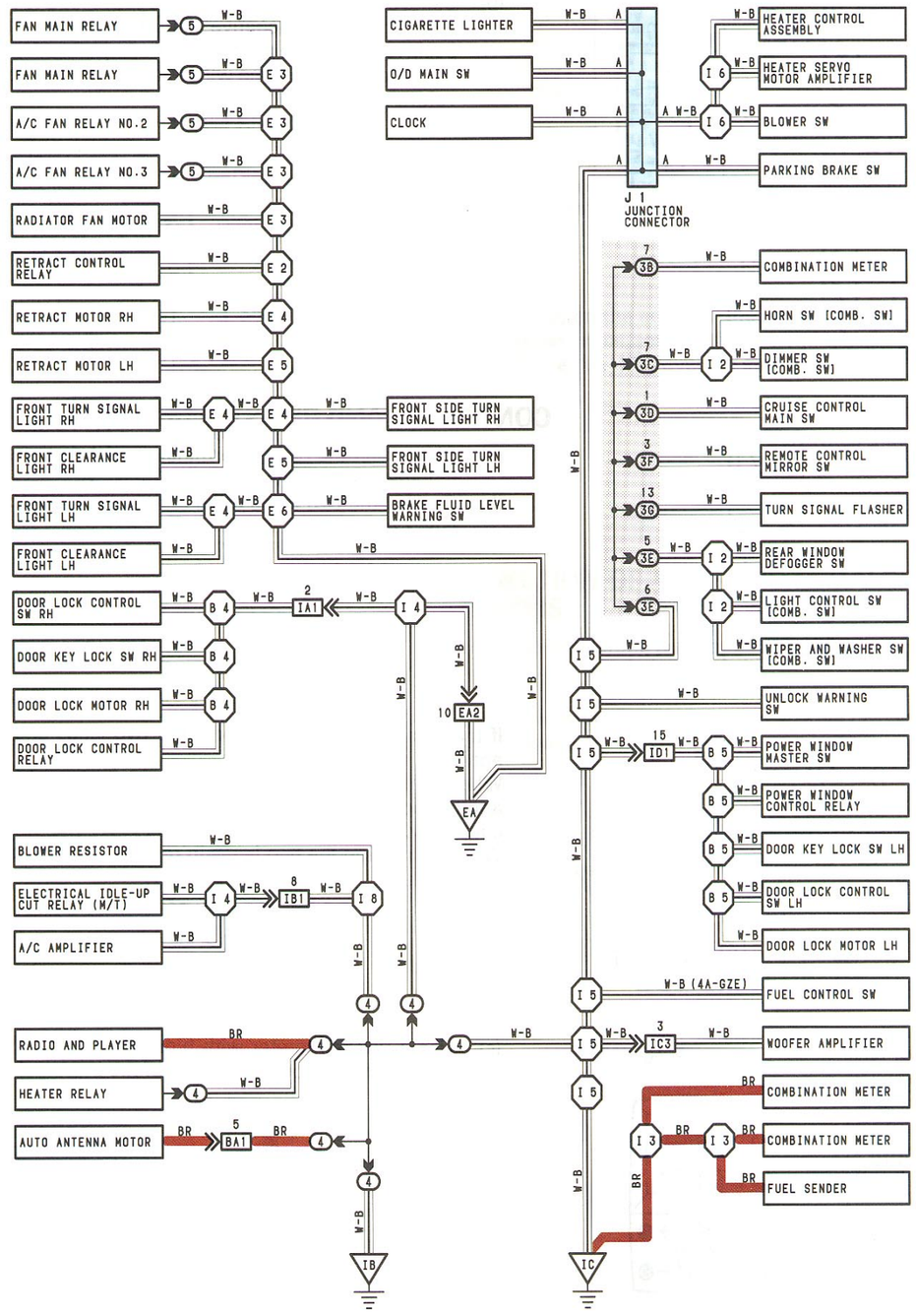

* The system shown here is an EXAMPLE ONLY. It is different to the actual circuit shown in the SYSTEM CIRCUITS SECTION.

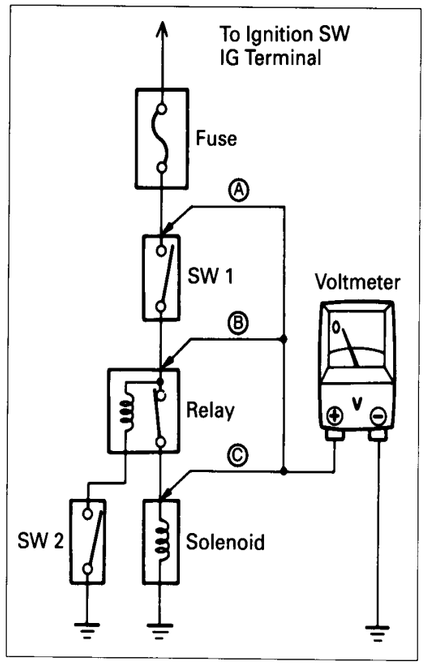

VOLTAGE CHECK

(a) Establish conditions in which voltage is present at the check point.

Example:
Ⓐ – Ignition SW on
Ⓑ – Ignition SW and SW 1 on
Ⓒ – Ignition SW, SW 1 and Relay on (SW 2 off)

(b) Using a voltmeter, connect the negative lead to a good ground point or negative battery terminal, and the positive lead to the connector or component terminal. This check can be done with a test a light instead of a voltmeter.

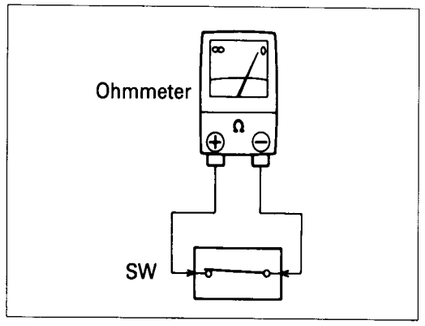

CONTINUITY AND RESISTANCE CHECK

(a) Disconnect the battery terminal or wire so there is no voltage between the check points.

(b) Contact the two leads of an ohmmeter to each of the check points.

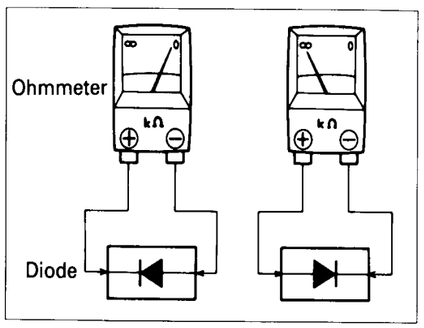

If the circuit has diodes, reverse the two leads and check again.
When contacting the negative lead to the diode positive side and the positive lead to the negative side, there should be continuity.
When contacting the two leads in reverse, there should be no continuity.

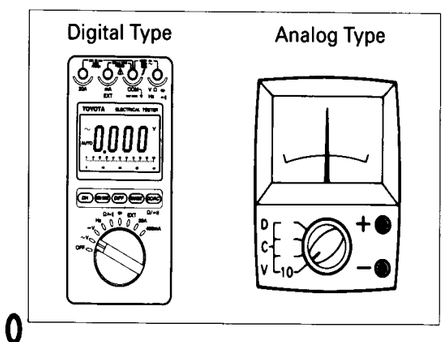

(c) Use a volt/ohmmeter with high impedance (10 kΩ/V minimum) for troubleshooting of the electrical circuit.

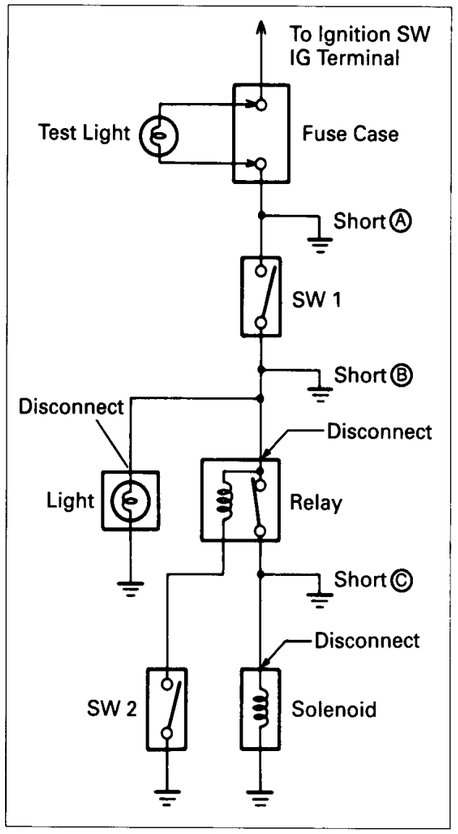

FINDING A SHORT CIRCUIT

(a) Remove the blown fuse and disconnect all loads of the fuse.

(b) Connect a test light in place of the fuse.

(c) Establish conditions in which the test light comes on.

Example:
Ⓐ – Ignition SW on
Ⓑ – Ignition SW and SW 1 on
Ⓒ – Ignition SW, SW 1 and Relay on (Connect the Relay) and SW 2 off (or Disconnect SW 2)

(d) Disconnect and reconnect the connectors while watching the test light.
The short lies between the connector where the test light stays lit and the connector where the light goes out.

(e) Find the exact location of the short by lightly shaking the problem wire along the body.

CAUTION:
Do not open the cover or the case of the ECU unless absolutely necessary. (If the IC terminals are touched, the IC may be destroyed by static electricity.)

DISCONNECTION OF MALE AND FEMALE CONNECTORS

To pull apart the connectors, pull on the connector itself, not the wire harness.

HINT: Check to see what kind of connector you are disconnecting before pulling apart.

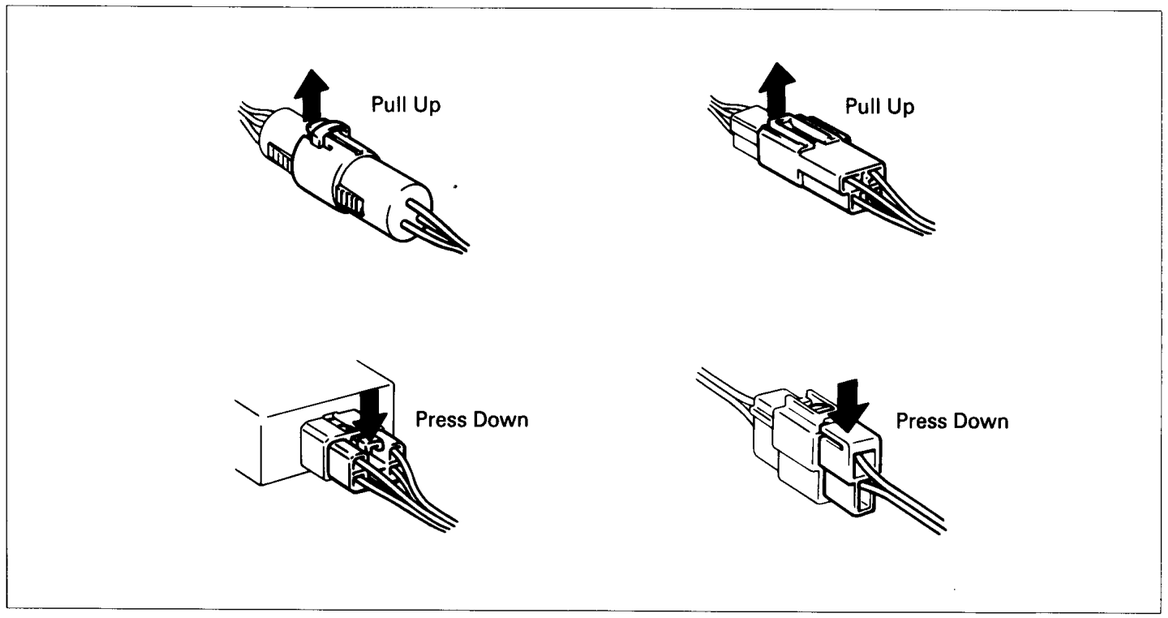

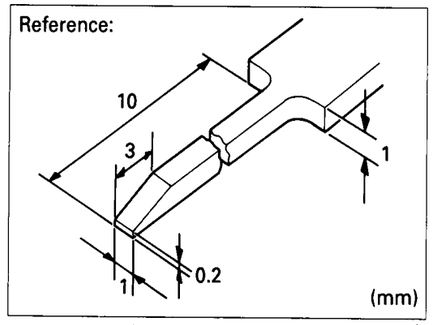

HOW TO REPLACE TERMINAL (with terminal retainer or secondary locking device)

1. PREPARE THE SPECIAL TOOL

   HINT: To remove the terminal from the connector, please construct and use the special tool or like object shown on the left.

2. DISCONNECT CONNECTOR

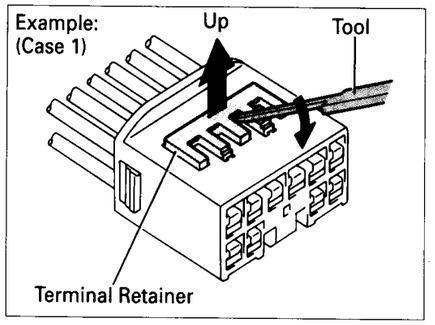

3. DISENGAGE THE SECONDARY LOCKING DEVICE OR TERMINAL RETAINER.

   (a) Locking device must be disengaged before the terminal locking clip can be released and the terminal removed from the connector.

   (b) Use a special tool or the terminal pick to unlock the secondary locking device or terminal retainer.

   NOTICE:
   Do not remove the terminal retainer from connector body.

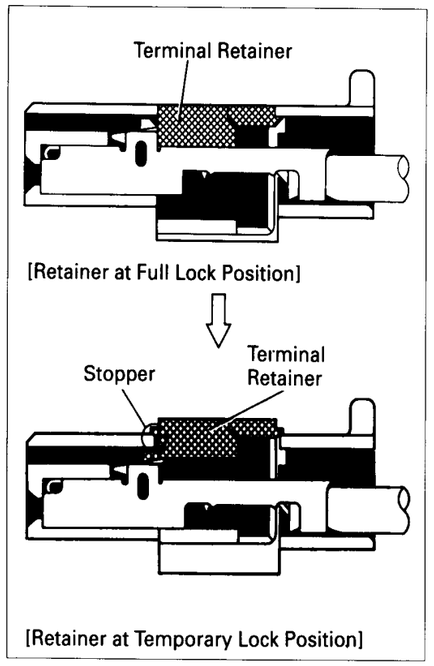

Ⓐ For Non-Waterproof Type Connector

HINT: The needle insertion position varies according to the connector's shape (number of terminals etc.), so check the position before inserting it.

"Case 1"
Raise the terminal retainer up to the temporary lock position.

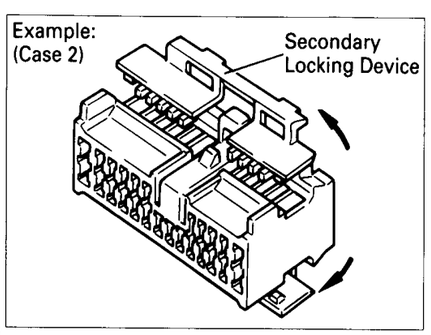

"Case 2"
Open the secondary locking device.

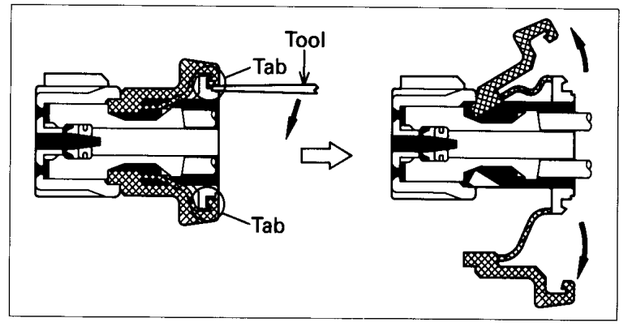

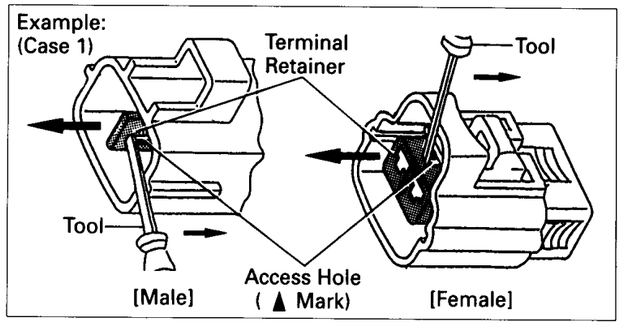

Ⓑ For Waterproof Type Connector

HINT: Terminal retainer color is different according to connector body.

Example:

Terminal Retainer:	Connector Body
Black or White	: Gray
Black or White	: Dark Gray
Gray or White	: Black

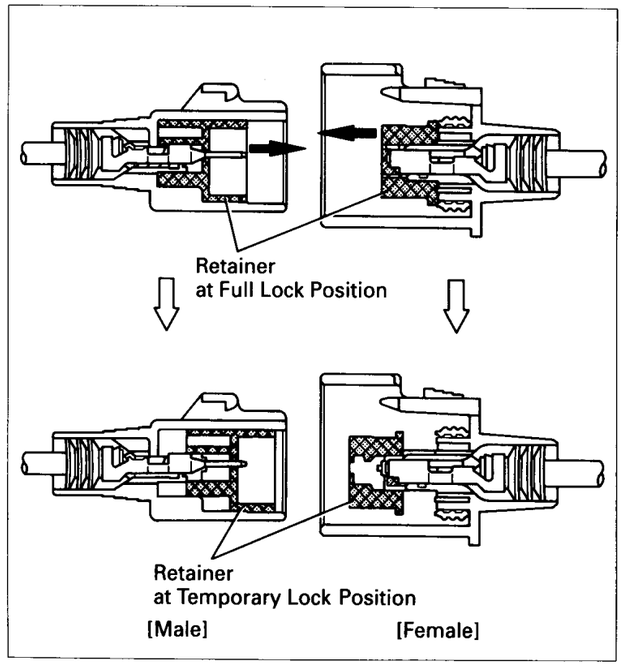

"Case 1"
Type where terminal retainer is pulled up to the temporary lock position (Pull Type).

Insert the special tool into the terminal retainer access hole (▲Mark) and pull the terminal retainer up to the temporary lock position.

HINT: The needle insertion position varies according to the connector's shape (Number of terminals etc.), so check the position before inserting it.

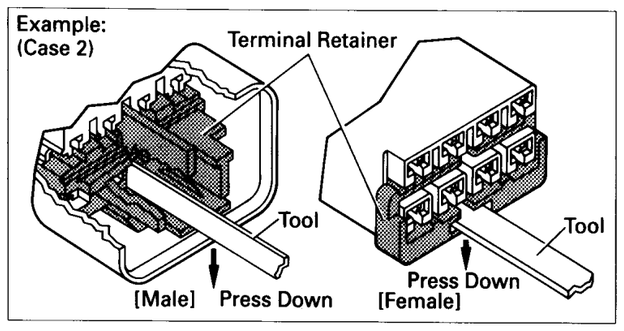

"Case 2"
Type which cannot be pulled as far as Power Lock insert the tool straight into the access hole of terminal retainer as shown.

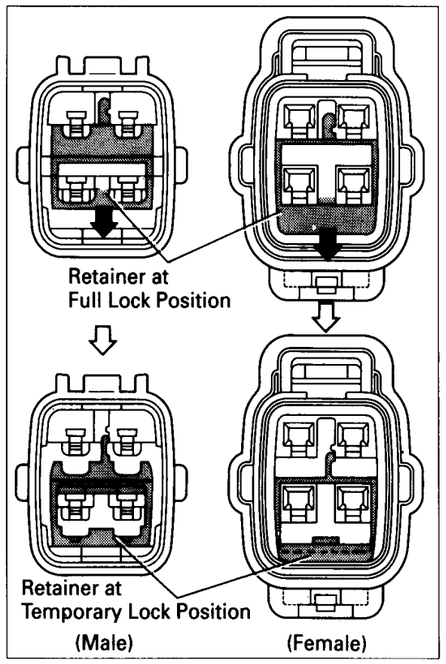

Push the terminal retainer down to the temporary lock position.

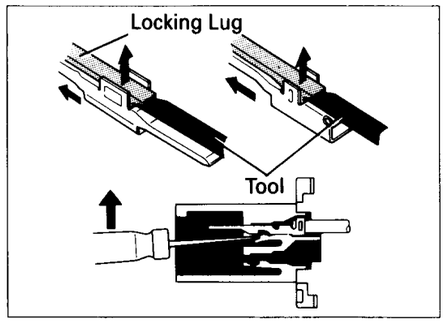

(c) Release the locking lug from terminal and pull the terminal out from rear.

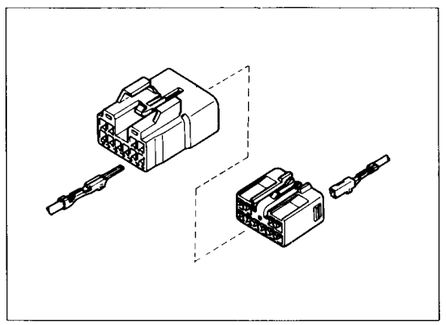

4. INSTALL TERMINAL TO CONNECTOR
   (a) Insert the terminal.

   HINT:
   1. Make sure the terminal is positioned correctly.
   2. Insert the terminal until the locking lug locks firmly.
   3. Insert the terminal with terminal retainer in the temporary lock position.

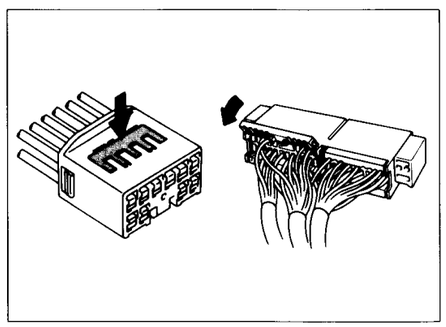

   (b) Push the secondary locking device or terminal retainer in to the full lock position.

5. CONNECT CONNECTOR

ABBREVIATIONS

The following abbreviations are used in this manual.

ABS	=	Anti-Lock Brake System
A/C	=	Air Conditioner
ACIS	=	Acoustic Control Induction System
A/T	=	Automatic Transaxle
COMB.	=	Combination
DLC3	=	Data Link Connector 3
ECT	=	Electronically Controlled Transmission
ECU	=	Electronic Control Unit
EFI	=	Electronic Fuel Injection
EGR	=	Exhaust Gas Recirculation
ESA	=	Electronic Spark Advance
FL	=	Fusible Link
ISC	=	Idle Speed Control
J/B	=	Junction Block
LH	=	Left-Hand
LHD	=	Left-Hand Drive
M/T	=	Manual Transaxle
R/B	=	Relay Block
RH	=	Right-Hand
RHD	=	Right-Hand Drive
SRS	=	Supplemental Restraint System
SW	=	Switch
TDCL	=	TOYOTA Diagnostic Communication Link
TEMP.	=	Temperature
VSV	=	Vacuum Switching Valve
w/	=	With
w/o	=	Without

* The titles given insids the components are the names of the terminals (terminal codes) and are not treated as being abbreviations.

E GLOSSARY OF TERMS AND SYMBOLS

BATTERY
Stores chemical energy and converts it into electrical energy. Provides DC current for the auto's various electrical circuits.

CAPACITOR (Condenser)
A small holding unit for temporary storage of electrical voltage.

CIGARETTE LIGHTER
An electric resistance heating element.

CIRCUIT BREAKER
Basically a reusable fuse, a circuit breaker will heat and open if too much current flows through it. Some units automatically reset when cool, others must be manually reset.

DIODE
A semiconductor which allows current flow in only one direction.

DIODE, ZENER
A diode which allows current flow in one direction but blocks reverse flow only up to a specific voltage. Above that potential, it passes the excess voltage. This acts as a simple voltage regulator.

DISTRIBUTOR, IIA
Channels high-voltage current from the ignition coil to the individual spark plugs.

FUSE
A thin metal strip which burns through when too much current flows through it, thereby stopping current flow and protecting a circuit from damage.

(for Medium Current Fuse)

FUSIBLE LINK
A heavy-gauge wire placed in high amperage circuits which burns through on overloads, thereby protecting the circuit. The numbers indicate the cross-section surface area of the wires.

(for High Current Fuse or Fusible Link)

GROUND
The point at which wiring attaches to the Body, thereby providing a return path for an electrical circuit; without a ground, current cannot flow.

HEADLIGHTS
1. **SINGLE FILAMENT**
2. **DOUBLE FILAMENT**

Current flow causes a headlight filament to heat up and emit light. A headlight may have either a single (1) filament or a double (2) filament.

HORN
An electric device which sounds a loud audible signal.

IGNITION COIL
Converts low-voltage DC current into high-voltage ignition current for firing the spark plugs.

LIGHT
Current flow through a filament causes the filament to heat up and emit light.

LED (LIGHT EMITTING DIODE)
Upon current flow, these diodes emit light without producing the heat of a comparable light.

METER, ANALOG
Current flow activates a magnetic coil which causes a needle to move, thereby providing a relative display against a background calibration.

METER, DIGITAL
Current flow activates one or many LED's, LCD's, or fluorescent displays, which provide a relative or digital display.

MOTOR
A power unit which converts electrical energy into mechanical energy, especially rotary motion.

RELAY
1. **NORMALLY CLOSED**
2. **NORMALLY OPEN**

Basically, an electrically operated switch which may be normally closed (1) or open (2). Current flow through a small cail creates a magnetic field which either opens or closes an attached switch.

RELAY, DOUBLE THROW
A relay which passes current through one set of contacts or the other.

RESISTOR
An electrical component with a fixed resistance, placed in a circuit to reduce voltage to a specific value.

RESISTOR, TAPPED
A resistor which supplies two or more different non adjustable resistance values.

RESISTOR, VARIABLE or RHEOSTAT
A controllable resistor with a variable rate of resistance. Also called a potentiometer or rheostat.

SENSOR (Thermistor)
A resistor which varies its resistance with temperature.

SENSOR, SPEED
Uses magnetic impulses to open and close a switch to create a signal for activation of other components.

(Reed Switch Type)

SHORT PIN
Used to provide an unbroken connection within a junction block.

SOLENOID
An electromagnetic coil which forms a magnetic field when current flows, to move a plunger, etc.

SPEAKER
An electromechanical device which creates sound waves from current flow.

SWITCH, MANUAL
1. **NORMALLY OPEN**
2. **NORMALLY CLOSED**

Opens and closes circuits, thereby stopping (1) or allowing (2) current flow.

SWITCH, DOUBLE THROW
A switch which continuously passes current through one set of contacts or the other.

SWITCH, IGNITION
A key operated switch with several positions which allows various circuits, particularly the primary ignition circuit, to become operational.

SWITCH, WIPER PARK
Automatically returns wipers to the stop position when the wiper switch is turned off.

TRANSISTOR
A solidstate device typically used as an electronic relay; stops or passes current depending on the voltage applied at "base".

WIRES
(1) **NOT CONNECTED**
(2) **SPLICED**

Wires are always drawn as straight lines on wiring diagrams. Crossed wires (1) without a black dot at the junction are not joined; crossed wires (2) with a black dot or octagonal (◯) mark at the junction are spliced (joined) connections.

[Engine Compartment]

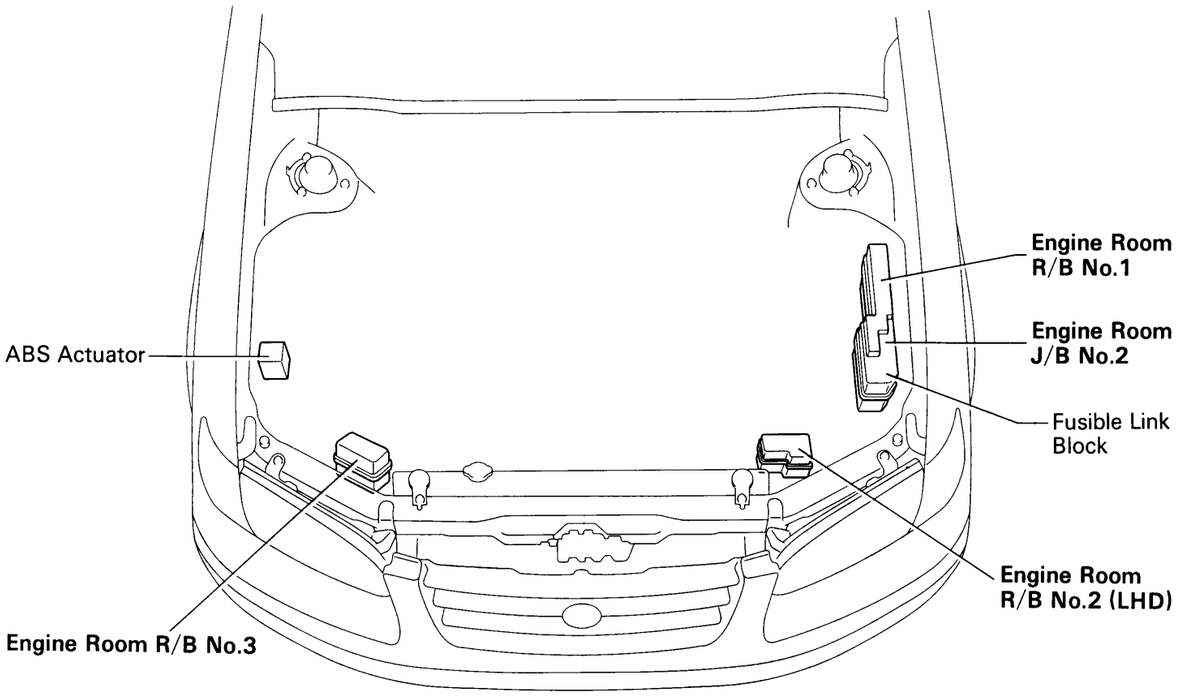

[Body]

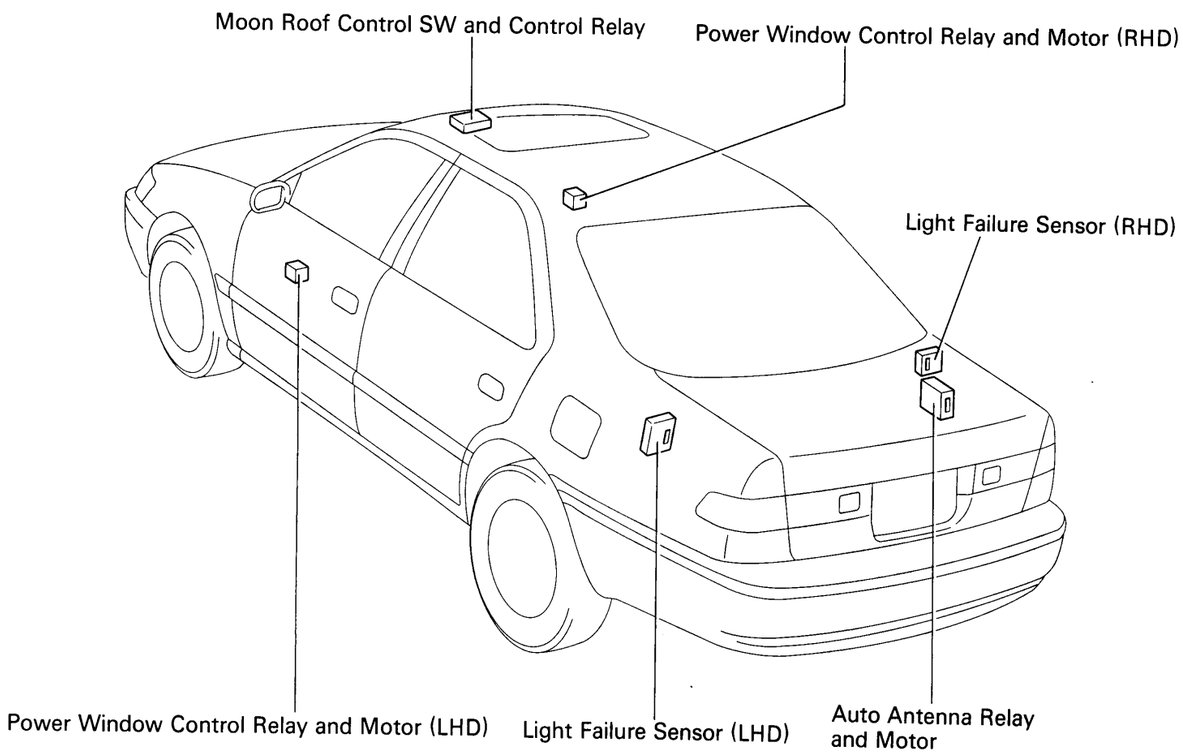

[Instrument Panel LHD]

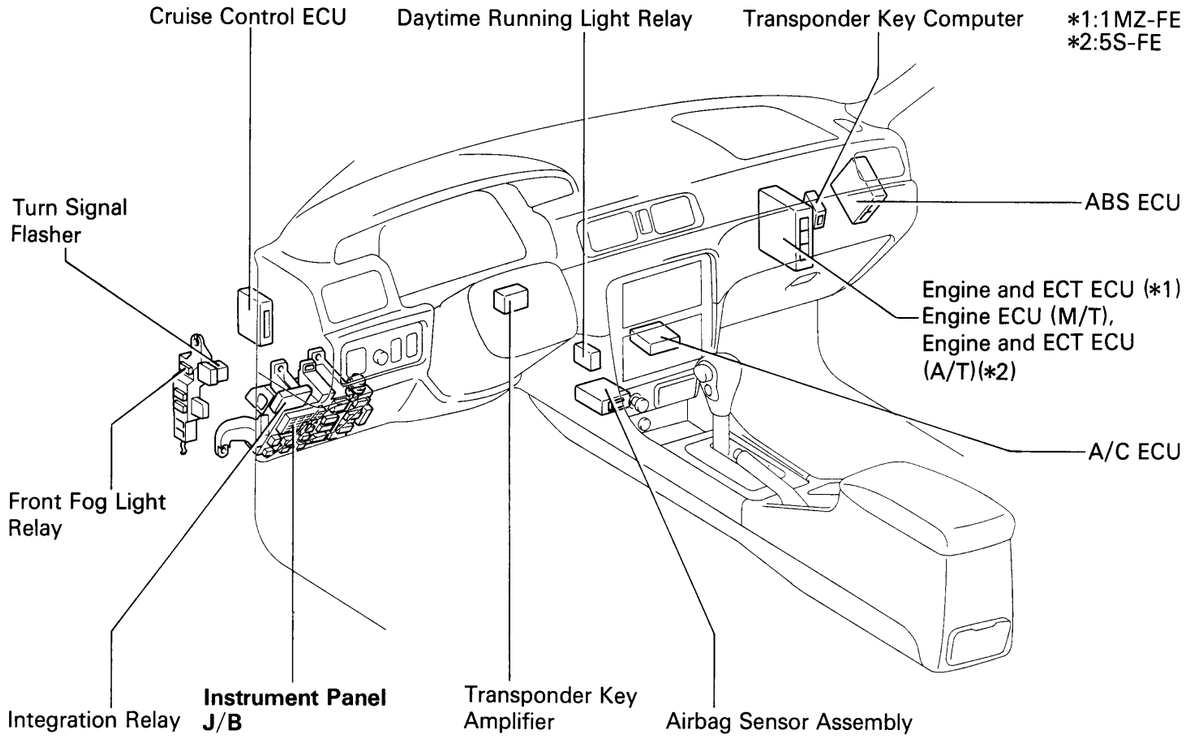

[Instrument Panel RHD]

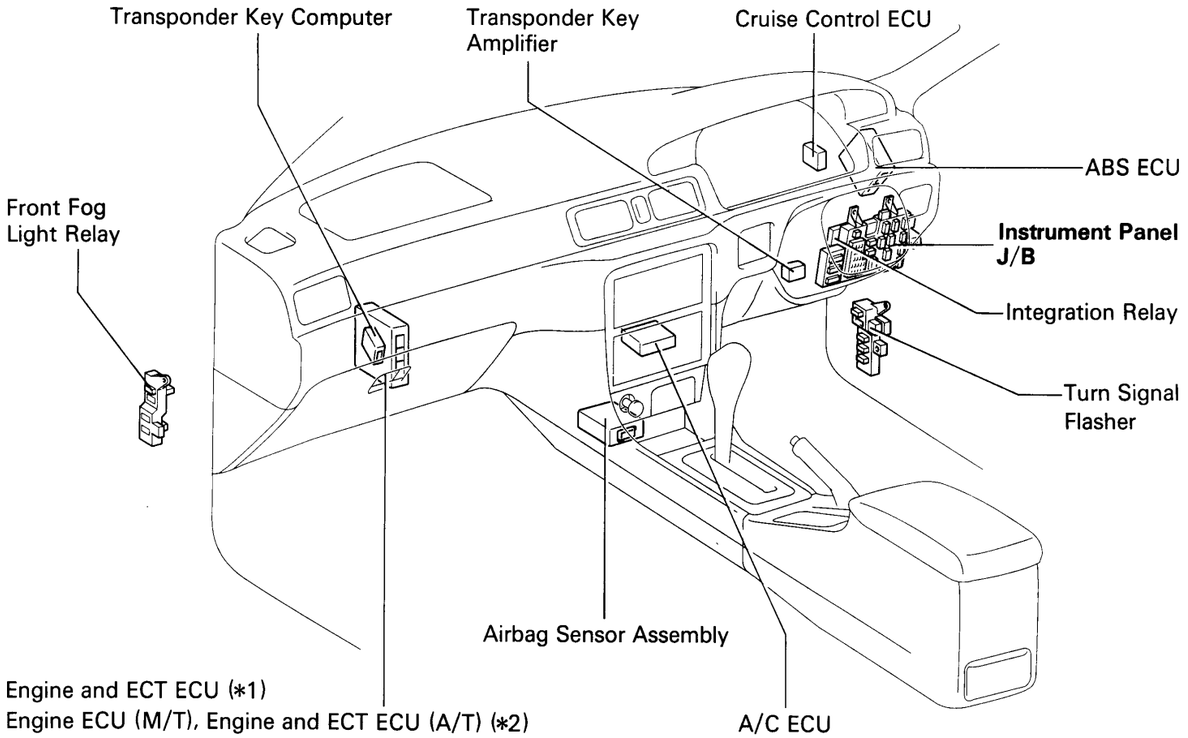

: Instrument Panel J/B (LHD) | Lower Finish Panel (See page 51)

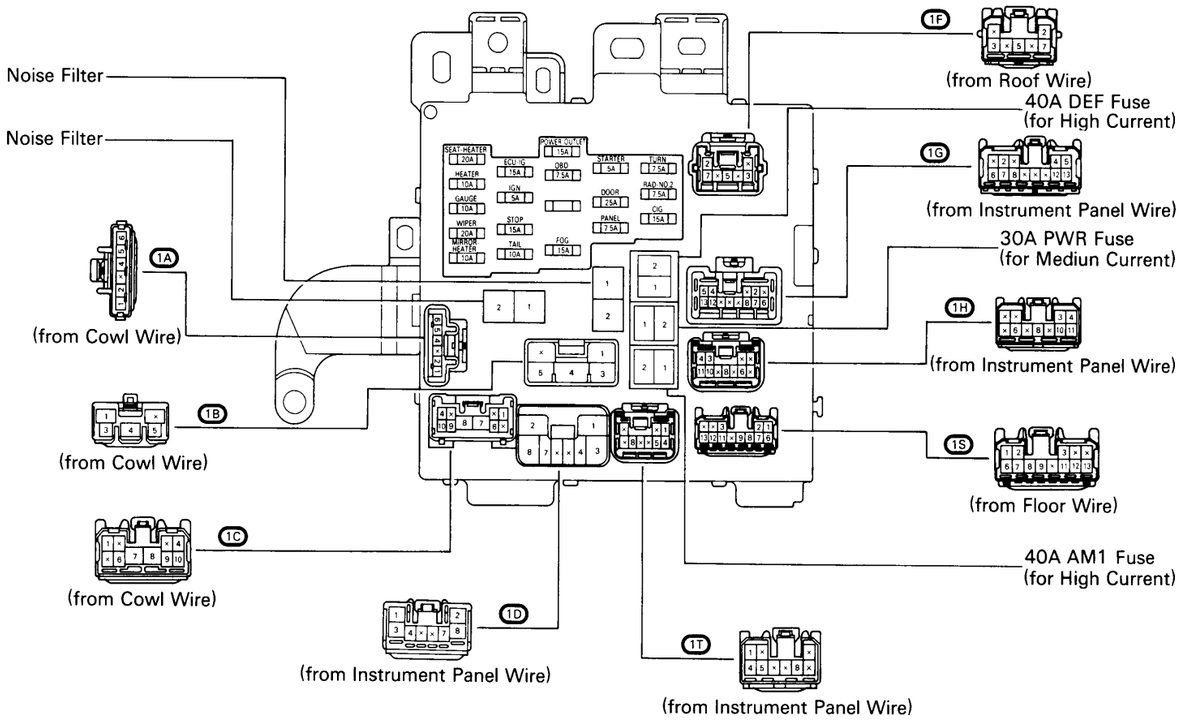

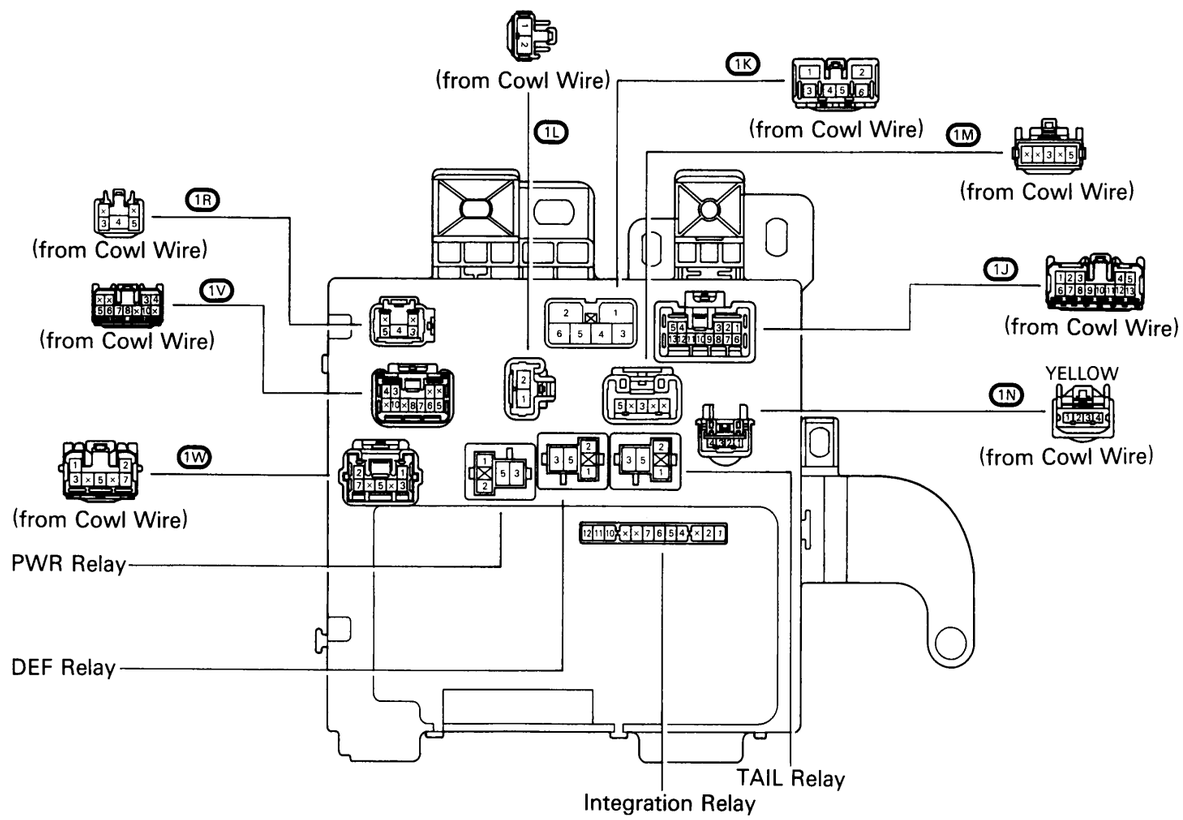

[Instrument Panel J/B (LHD) Inner Circuit]

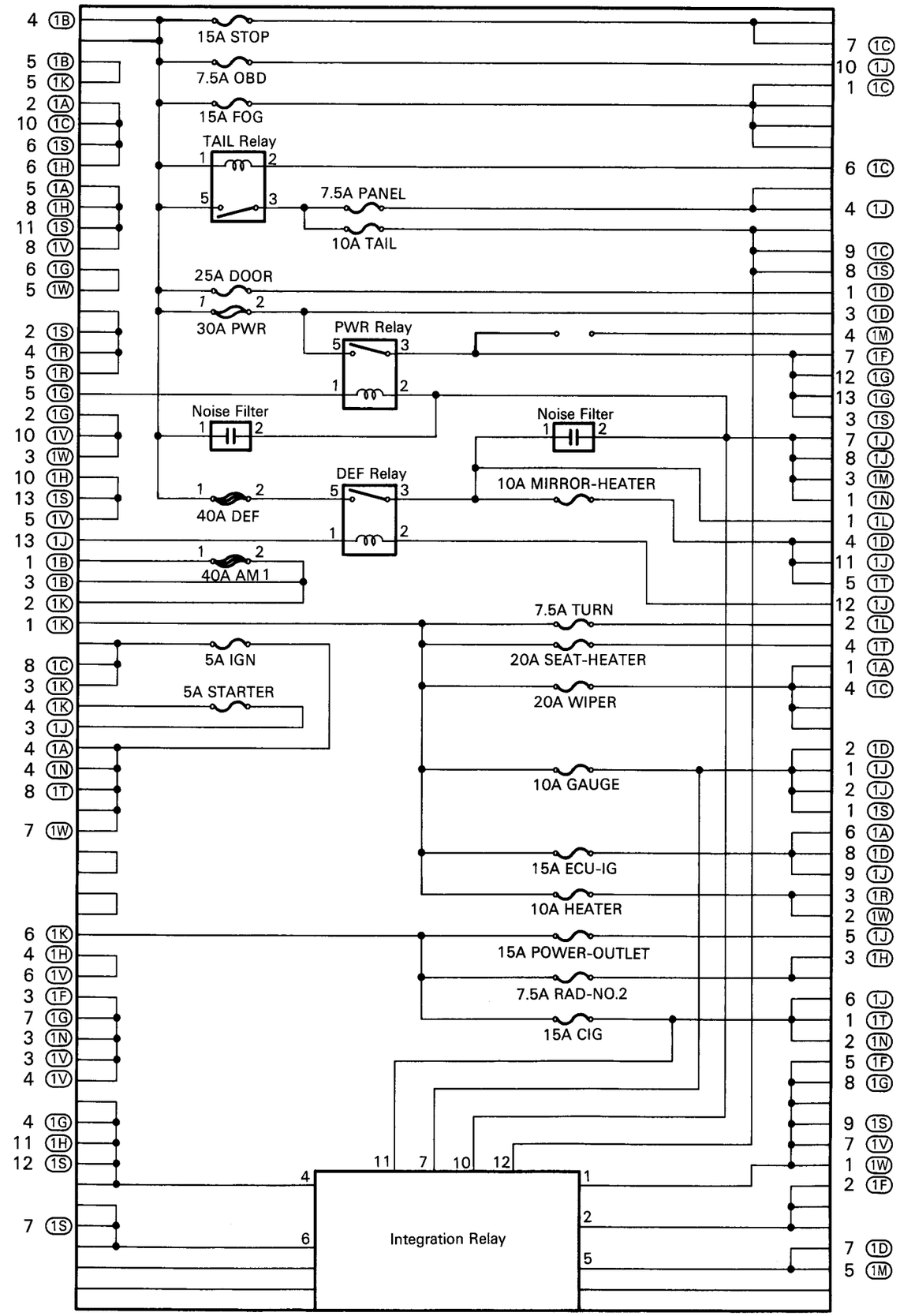

English

⬭: Engine Room J/B No.2 | Engine Compartment Left (See page 50)

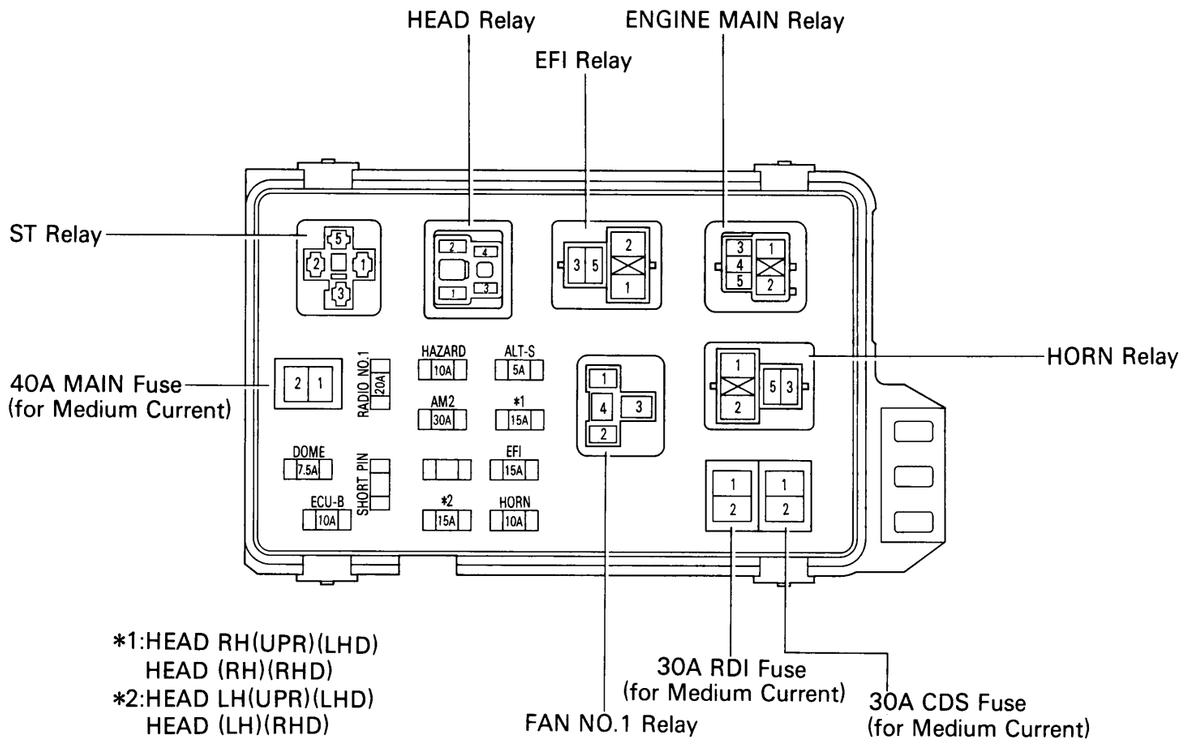

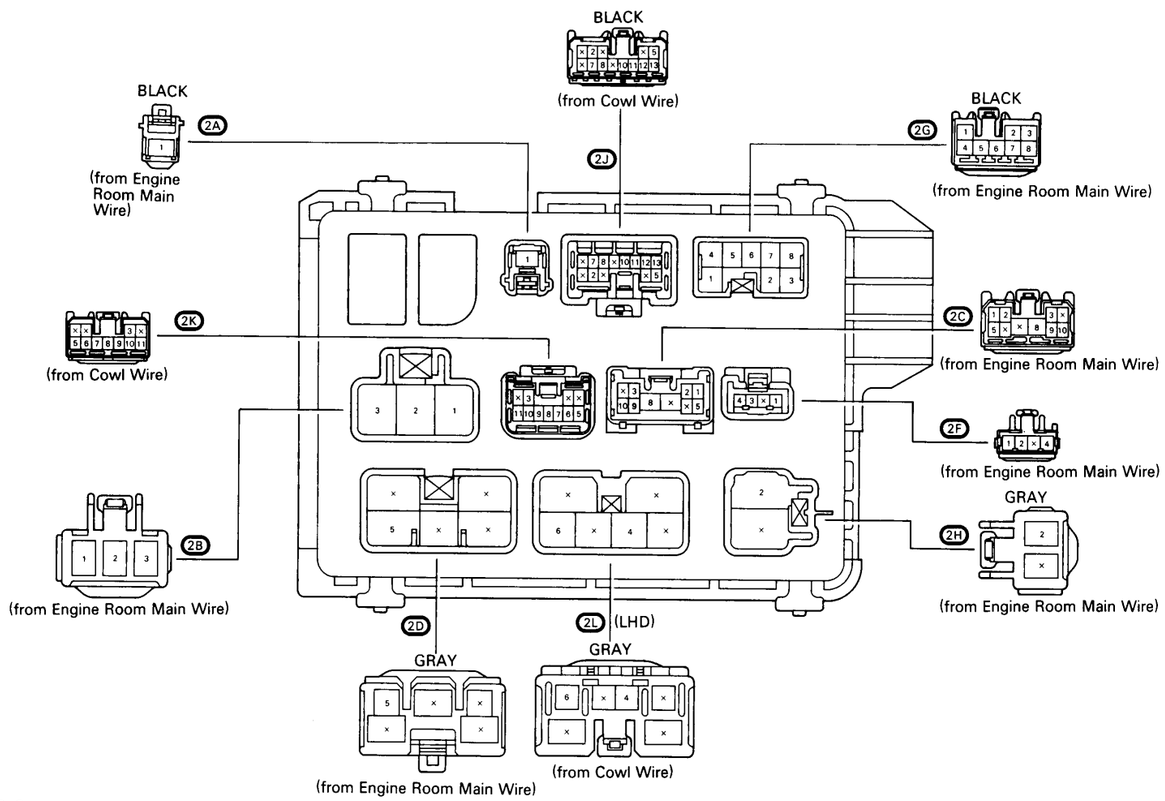

English

[Engine Room J/B No.2 Inner Circuit]

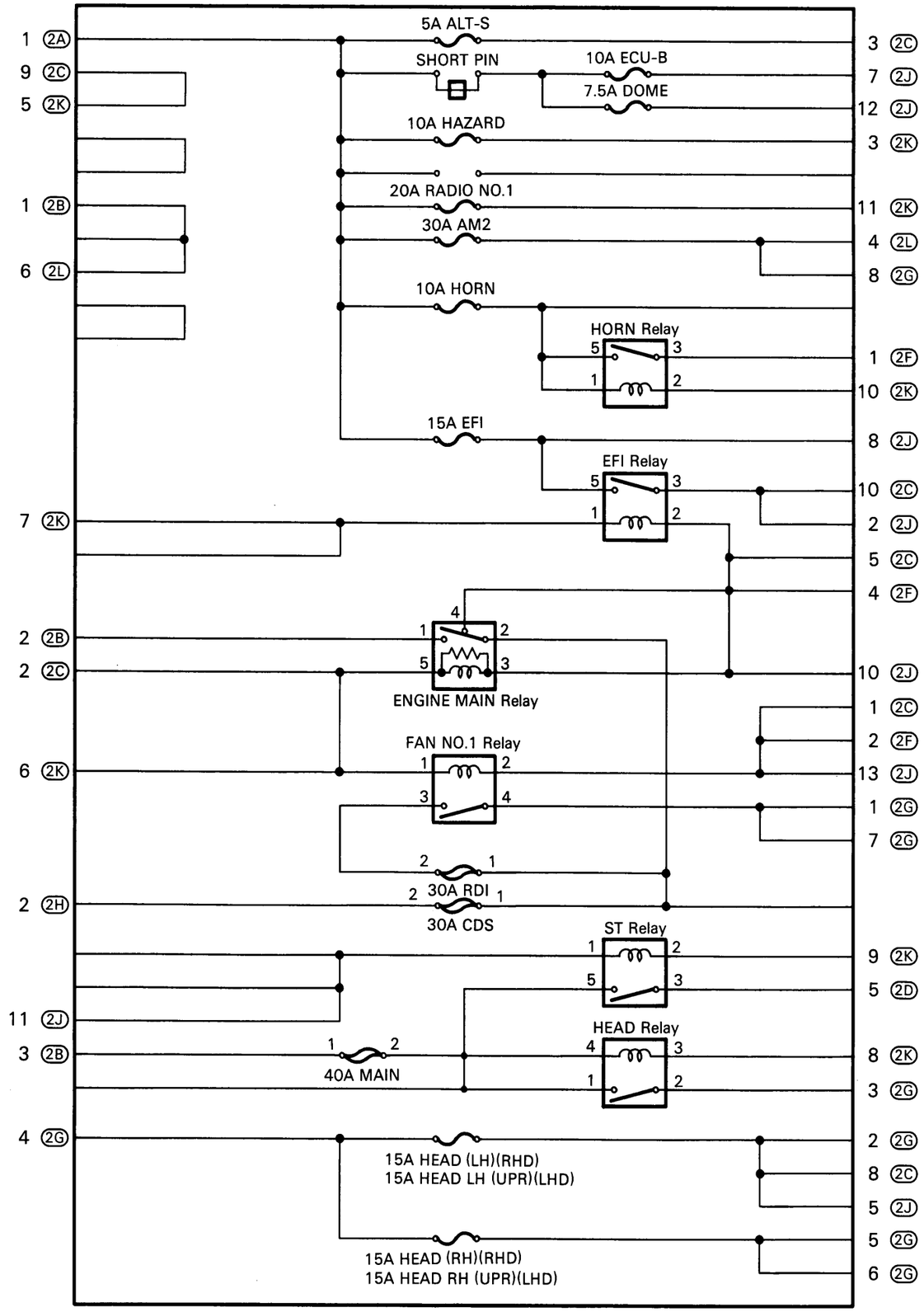

Fusible Link Block	Engine Compartment Left (See page 50)
	Inside Engine Room J/B No.2

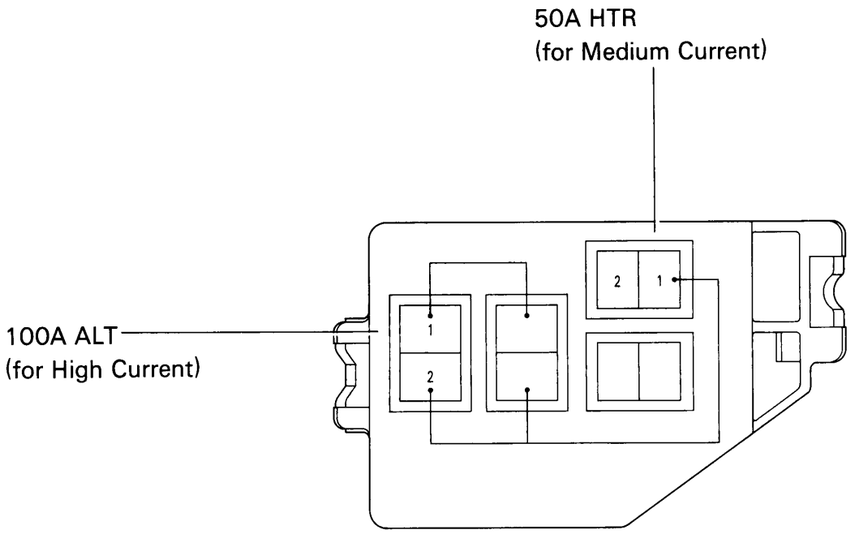

①: Engine Room R/B No.1	Engine Compartment Left (See page 50)
	Inside Engine Room J/B No.2

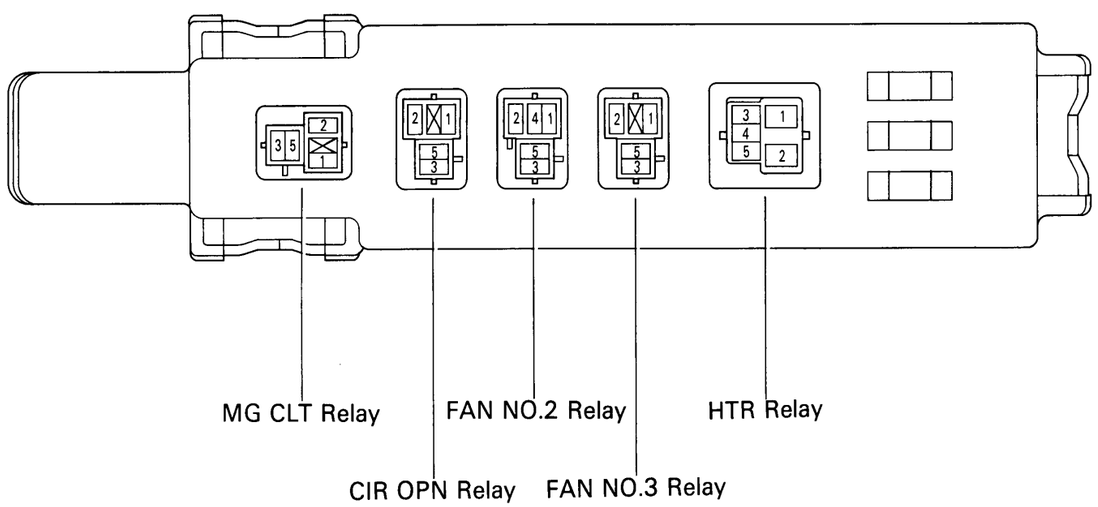

②: Engine Room R/B No.2	Near The Battery (See page 50)

[LHD]

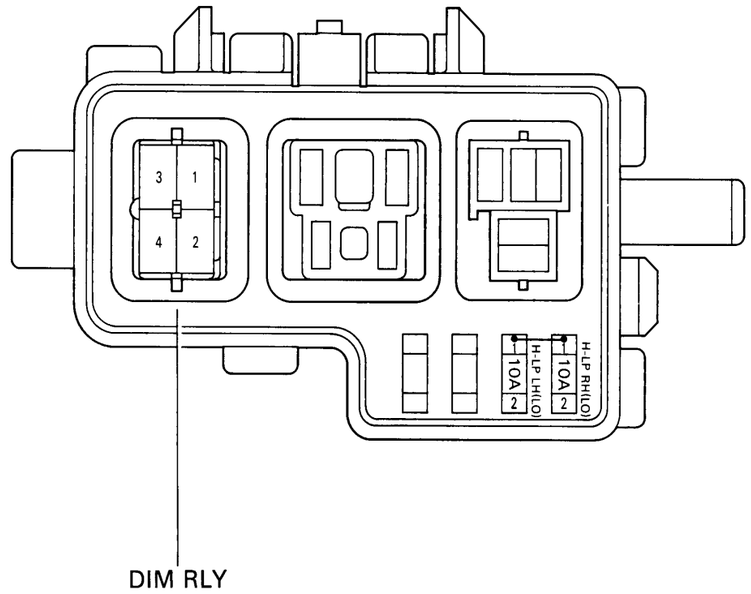

③: Engine Room R/B No.3	Radiator Upper Support LH (See page 50)

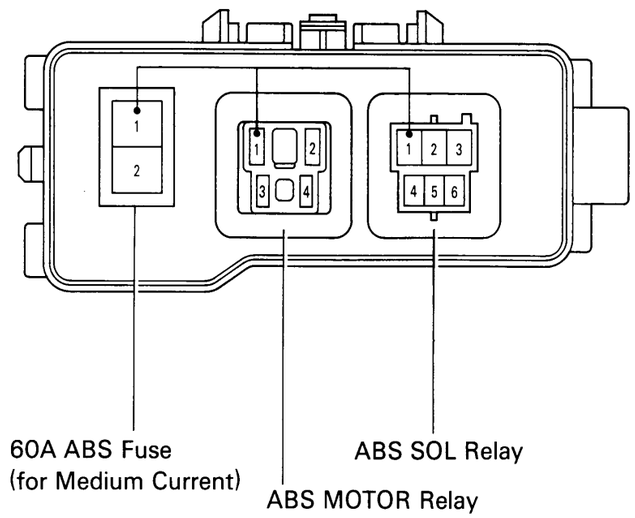

Position of Parts in Engine Compartment

[1MZ-FE LHD]

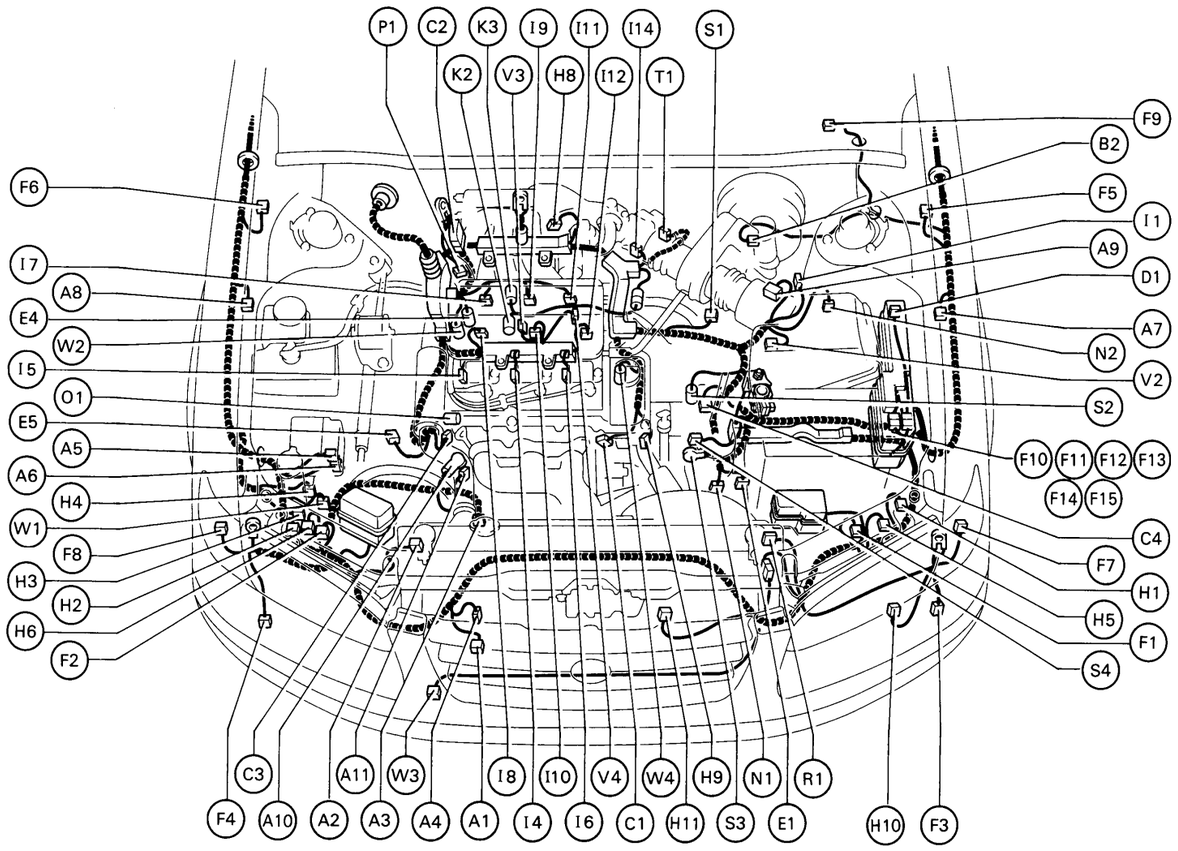

Position of Parts in Engine Compartment

Code	English	*Français*	*Español*
A 1	A/C Ambient Temp. Sensor	*Capteur de température ambiante A/C*	*Sensor del temperatura del ambiente del A/C*
A 2	A/C Condenser Fan Motor	*Moteur de ventilateur de condenseur A/C*	*Motor del ventilador del condensador del A/C*
A 3	A/C Magnetic Clutch and Lock Sensor	*Accouplement magnétique et capteur de blocage A/C*	*Embrague magnético y sensor de bloqueo del A/C*
A 4	A/C Triple Pressure SW (A/C Dual and Single Pressure SW)	*Triple pressostat A/C (pressostat double et simple A/C)*	*Interruptor de presión triple del A/C (interruptor de presión doble y sencillo del A/C)*
A 5	ABS Actuator	*Dispositif de commande ABS*	*Actuador del ABS*
A 6	ABS Actuator	*Dispositif de commande ABS*	*Actuador del ABS*
A 7	ABS Speed Sensor Front LH	*Capteur de vitesse avant gauche ABS*	*Sensor de velocidad del ABS frontal izquierda*
A 8	ABS Speed Sensor Front RH	*Capteur de vitesse avant droit ABS*	*Sensor de velocidad del ABS frontal derecha*
A 9	Air Flow Meter	*Compteur de débit d'air*	*Medidor de flujo de aire*
A 10	Alternator	*Alternateur*	*Alternador*
A 11	Alternator	*Alternateur*	*Alternador*
B 2	Brake Fluid Level Warning SW	*Manocontact de rapple de niveau de liquide de frein*	*Interruptor de advertencia del nivel del liquido de frenos*
C 1	Camshaft Position Sensor	*Capteur de position d'arbre à cames*	*Sensor de posición del árbol de levas*
C 2	Check Connector	*Bloc raccord de diagnostic*	*Conector de comprobación*
C 3	Crankshaft Position Sensor	*Capteur de position de vilebrequin*	*Sensor de posición del cigüeñal*
C 4	Cruise Control Actuator	*Actionneur de contrôle de croisière*	*Activador del control de crucero*
D 1	Diode (A/C)	*Diode (A/C)*	*Diode (A/C)*
E 1	ECT Solenoid	*Solénoïde de commande ECT*	*Solenoide de ECT*
E 4	EFI Water Temp. Sensor	*Capteur de température d'eau EFI*	*Sensor de la temperatura del agua de EFI*
E 5	Engine Oil Level Sensor	*Manocontact de niveau d'huile moteur*	*Sensor del nivel de aceite del motor*
F 1	Front Clearance Light LH	*Feu d'encombrement avant gauche*	*Luz de paso frontal izquierda*
F 2	Front Clearance Light RH	*Feu d'encombrement avant droit*	*Luz de paso frontal derecha*
F 3	Front Fog Light LH	*Projecteur antibrouillard avant gauche*	*Luz antiniebla frontal izquierda*
F 4	Front Fog Light RH	*Projecteur antibrouillard avant droit*	*Luz antiniebla frontal derecha*
F 5	Front Side Turn Signal Light LH	*Feu de changement de direction latéral avant gauche*	*Luz de la señal de giro lateral frontal izquierda*
F 6	Front Side Turn Signal Light RH	*Feu de changement de direction latéral avant droit*	*Luz de la señal de giro lateral frontal derecha*
F 7	Front Turn Signal Light LH	*Feu de changement de direction avant gauche*	*Luz de la señal de giro frontal izquierda*
F 8	Front Turn Signal Light RH	*Feu de changement de direction avant droit*	*Luz de la señal de giro frontal derecha*
F 9	Front Wiper Motor	*Moteur d'essuie-glace de pare-brise*	*Motor del limpiador frontal*
F 10	Fusible Link Block	*Boîte d'éléments fusibles*	*Bloque de eslabones fusibles*
F 11	Fusible Link Block	*Boîte d'éléments fusibles*	*Bloque de eslabones fusibles*
F 12	Fusible Link Block	*Boîte d'éléments fusibles*	*Bloque de eslabones fusibles*
F 13	Fusible Link Block	*Boîte d'éléments fusibles*	*Bloque de eslabones fusibles*
F 14	Fusible Link Block	*Boîte d'éléments fusibles*	*Bloque de eslabones fusibles*
F 15	Fusible Link Block	*Boîte d'éléments fusibles*	*Bloque de eslabones fusibles*
H 1	Headlight Beam Level Control Actuator LH	*Dispositif de commande gauche de réglage d'orientation de faisceau de projecteur*	*Actuador de control del nivel del haz del faro izquierda*
H 2	Headlight Beam Level Control Actuator RH	*Dispositif de commande droit de réglage d'orientation de faisceau de projecteur*	*Actuador de control del nivel del haz del faro derecha*
H 3	Headlight Cleaner Motor	*Moteur de lave-projecteurs*	*Motor del limpiador del faro*
H 4	Headlight Cleaner Relay	*Relais de lave-projecteurs*	*Relé del limpiador del faro*
H 5	Headlight LH	*Projecteur avant gauche*	*Faro izquierda*
H 6	Headlight RH	*Projecteur avant droit*	*Faro derecha*
H 8	Heated Oxygen Sensor (Bank 1 Sensor 1)	*Capteur d'oxygène réchauffé (Banque 1 Capteur 1)*	*Sensor de oxígeno calentado (Banco 1 Sensor 1)*
H 9	Heated Oxygen Sensor (Bank 2 Sensor 1)	*Capteur d'oxygène réchauffé (Banque 2 Capteur 1)*	*Sensor de oxígeno calentado (Banco 2 Sensor 1)*
H 10	Horn (High)	*Avertisseur (aigu)*	*Bocina (alta)*
H 11	Horn (Low)	*Avertisseur (grave)*	*Bocina (baja)*
I 1	Igniter	*Allumeur*	*Encendedor*
I 4	Ignition Coil No.1 and No.4	*Bobines d'allumage no.1 et no.4*	*Bobina de encendido N.°1 y N.°4*
I 5	Ignition Coil No.2 and No.5	*Bobines d'allumage no.2 et no.5*	*Bobina de encendido N.°2 y N.°5*
I 6	Ignition Coil No.3 and No.6	*Bobines d'allumage no.3 et no.6*	*Bobina de encendido N.°3 y N.°6*
I 7	Injector No.1	*Injecteur no.1*	*Inyector N.°1*
I 8	Injector No.2	*Injecteur no.2*	*Inyector N.°2*
I 9	Injector No.3	*Injecteur no.3*	*Inyector N.°3*
I 10	Injector No.4	*Injecteur no.4*	*Inyector N.°4*
I 11	Injector No.5	*Injecteur no.5*	*Inyector N.°5*
I 12	Injector No.6	*Injecteur no.6*	*Inyector N.°6*
I 14	ISC Valve	*Soupape ISC*	*Válvula ISC*
K 2	Knock Sensor 1	*Capteur de cognement moteur 1*	*Sensor de golpeteo 1*
K 3	Knock Sensor 2	*Capteur de cognement moteur 2*	*Sensor de golpeteo 2*
N 1	Neutral Start SW, A/T Indicator Light SW and Back-Up Light SW	*Contacteur de démarrage au point mort, contacteur d'indicateur A/T et contacteur de feux de recul*	*Interruptor de arranque en punto muerto, interruptor de la luz indicadora de A/T e interruptor de la luz de marcha atrás*
N 2	Noise Filter (Ignition System)	*Filtre anti-parasites (système d'allumage)*	*Filtro contra el ruido (sistema de encendido)*
O 1	Oil Pressure SW	*Manocontact de pression d'huile*	*Interruptor de presión de aceite*
P 1	Power Steering Oil Pressure SW	*Manocontact de pression d'huile de direction assist*	*Interruptor de la presión de aceite de la servodirección*
R 1	Radiator Fan Motor	*Moteur d'entraînement de ventilateur électrique de radiateur*	*Motor del ventilador del radiador*
S 1	Speed Sensor (Combination Meter)	*Capteur de vitesse (combiné de bord)*	*Sensor de velocidad (medidor de combinación)*
S 2	Speed Sensor (ECT)	*Capteur de vitesse (ECT)*	*Sensor de velocidad (ECT)*
S 3	Starter	*Démarreur*	*Arrancador*
S 4	Starter	*Démarreur*	*Arrancador*
T 1	Throttle Position Sensor	*Capteur de position de papillon d'accélération*	*Sensor de posición del acelerador*
V 2	Variable Resistor	*Résistance variable*	*Resistor variable*
V 3	VSV (ACIS)	*VSV (ACIS)*	*VSV (ACIS)*
V 4	VSV (EGR)	*VSV (EGR)*	*VSV (EGR)*
W 1	Washer Motor	*Moteur de lave-glace*	*Motor del lavador*
W 2	Water Temp. Sender	*Jauge émettrice de température d'eau*	*Emisor de la temperatura del agua*
W 3	Water Temp. SW No.1	*Contacteur thermoélectrique no.1*	*Interruptor de la temperatura del agua N.°1*
W 4	Water Temp. SW No.2	*Contacteur thermoélectrique no.2*	*Interruptor de la temperatura del agua N.°2*

Position of Parts in Engine Compartment

[5S-FE LHD]

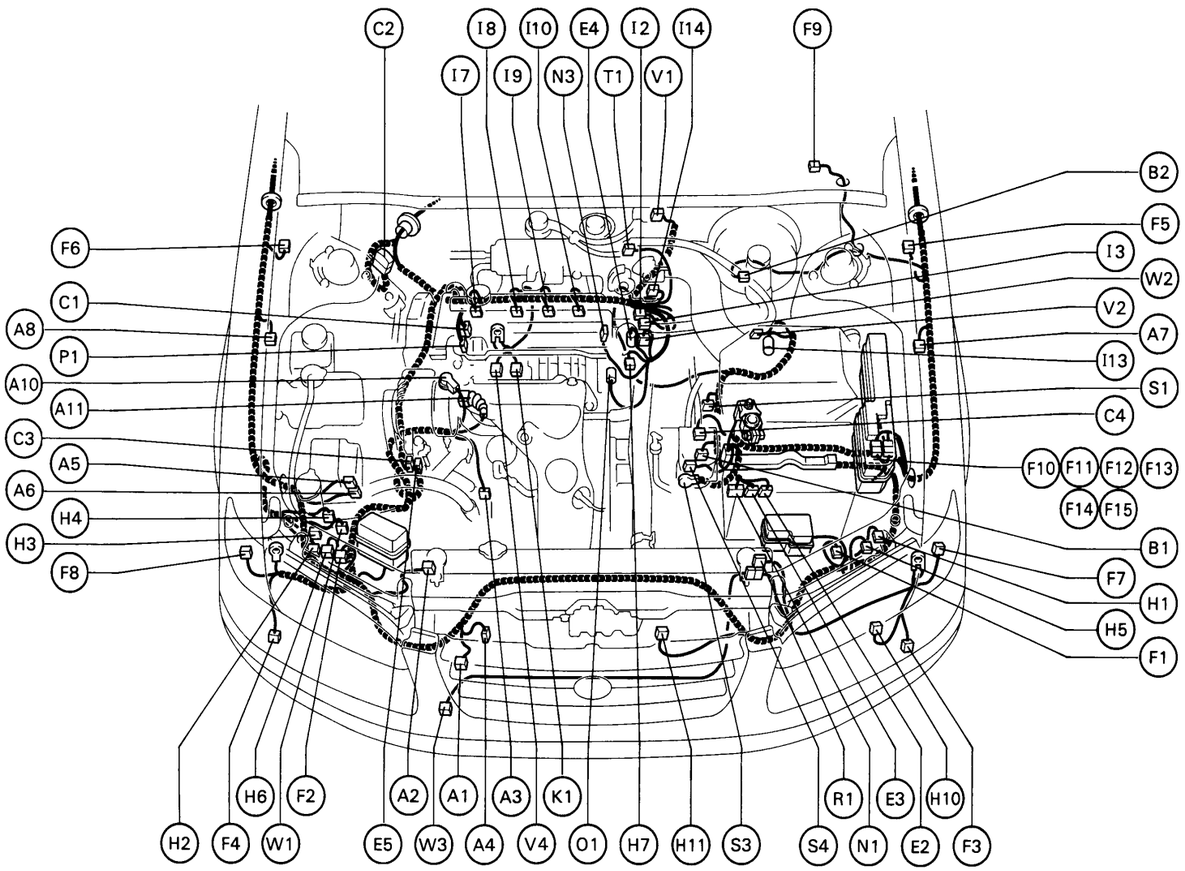

Position of Parts in Engine Compartment

Code	English	*Français*	*Español*
A 1	A/C Ambient Temp. Sensor	*Capteur de température ambiante A/C*	*Sensor del temperatura del ambiente del A/C*
A 2	A/C Condenser Fan Motor	*Moteur de ventilateur de condenseur A/C*	*Motor del ventilador del condensador del A/C*
A 3	A/C Magnetic Clutch and Lock Sensor	*Accouplement magnétique et capteur de blocage A/C*	*Embrague magnético y sensor de bloqueo del A/C*
A 4	A/C Triple Pressure SW (A/C Dual and Single Pressure SW)	*Triple pressostat A/C (pressostat double et simple A/C)*	*Interruptor de presión triple del A/C (interruptor de presión doble y sencillo del A/C)*
A 5	ABS Actuator	*Dispositif de commande ABS*	*Actuador del ABS*
A 6	ABS Actuator	*Dispositif de commande ABS*	*Actuador del ABS*
A 7	ABS Speed Sensor Front LH	*Capteur de vitesse avant gauche ABS*	*Sensor de velocidad del ABS frontal izquierda*
A 8	ABS Speed Sensor Front RH	*Capteur de vitesse avant droit ABS*	*Sensor de velocidad del ABS frontal derecha*
A 10	Alternator	*Alternateur*	*Alternador*
A 11	Alternator	*Alternateur*	*Alternador*
B 1	Back-Up Light SW	*Contacteur de feux de recul*	*Interruptor de la luz de marcha atrás*
B 2	Brake Fluid Level Warning SW	*Manocontact de rapple de niveau de liquide de frein*	*Interruptor de advertencia del nivel del líquido de frenos*
C 1	Camshaft Position Sensor	*Capteur de position d'arbre à cames*	*Sensor de posición del árbol de levas*
C 2	Check Connector	*Bloc raccord de diagnostic*	*Conector de comprobación*
C 3	Crankshaft Position Sensor	*Capteur de position de vilebrequin*	*Sensor de posición del cigüeñal*
C 4	Cruise Control Actuator	*Actionneur de contrôle de croisière*	*Activador del control de crucero*
E 2	ECT Solenoid	*Solénoïde de commande ECT*	*Solenoide de ECT*
E 3	ECT Solenoid	*Solénoïde de commande ECT*	*Solenoide de ECT*
E 4	EFI Water Temp. Sensor	*Capteur de température d'eau EFI*	*Sensor de la temperatura del agua de EFI*
E 5	Engine Oil Level Sensor	*Manocontact de niveau d'huile moteur*	*Sensor del nivel de aceite del motor*
F 1	Front Clearance Light LH	*Feu d'encombrement avant gauche*	*Luz de paso frontal izquierda*
F 2	Front Clearance Light RH	*Feu d'encombrement avant droit*	*Luz de paso frontal derecha*
F 3	Front Fog Light LH	*Projecteur antibrouillard avant gauche*	*Luz antiniebla frontal izquierda*
F 4	Front Fog Light RH	*Projecteur antibrouillard avant droit*	*Luz antiniebla frontal derecha*
F 5	Front Side Turn Signal Light LH	*Feu de changement de direction latéral avant gauche*	*Luz de la señal de giro lateral frontal izquierda*
F 6	Front Side Turn Signal Light RH	*Feu de changement de direction latéral avant droit*	*Luz de la señal de giro lateral frontal derecha*
F 7	Front Turn Signal Light LH	*Feu de changement de direction avant gauche*	*Luz de la señal de giro frontal izquierda*
F 8	Front Turn Signal Light RH	*Feu de changement de direction avant droit*	*Luz de la señal de giro frontal derecha*
F 9	Front Wiper Motor	*Moteur d'essuie-glace de pare-brise*	*Motor del limpiador frontal*
F 10	Fusible Link Block	*Boîte d'éléments fusibles*	*Bloque de eslabones fusibles*
F 11	Fusible Link Block	*Boîte d'éléments fusibles*	*Bloque de eslabones fusibles*
F 12	Fusible Link Block	*Boîte d'éléments fusibles*	*Bloque de eslabones fusibles*
F 13	Fusible Link Block	*Boîte d'éléments fusibles*	*Bloque de eslabones fusibles*
F 14	Fusible Link Block	*Boîte d'éléments fusibles*	*Bloque de eslabones fusibles*
F 15	Fusible Link Block	*Boîte d'éléments fusibles*	*Bloque de eslabones fusibles*
H 1	Headlight Beam Level Control Actuator LH	*Dispositif de commande gauche de réglage d'orientation de faisceau de projecteur*	*Actuador de control del nivel del haz del faro izquierda*
H 2	Headlight Beam Level Control Actuator RH	*Dispositif de commande droit de réglage d'orientation de faisceau de projecteur*	*Actuador de control del nivel del haz del faro derecha*
H 3	Headlight Cleaner Motor	*Moteur de lave-projecteurs*	*Motor del limpiador del faro*
H 4	Headlight Cleaner Relay	*Relais de lave-projecteurs*	*Relé del limpiador del faro*
H 5	Headlight LH	*Projecteur avant gauche*	*Faro izquierda*
H 6	Headlight RH	*Projecteur avant droit*	*Faro derecha*
H 7	Heated Oxygen Sensor	*Capteur d'oxygène réchauffé*	*Sensor de oxígeno calentado*
H 10	Horn (High)	*Avertisseur (aigu)*	*Bocina (alta)*
H 11	Horn (Low)	*Avertisseur (grave)*	*Bocina (baja)*
I 2	Ignition Coil and Igniter No.1	*Bobine d'allumage et allumeur no.1*	*Bobina de encendid y encendedor N. 1*
I 3	Ignition Coil and Igniter No.2	*Bobine d'allumage et allumeur no.2*	*Bobina de encendid y encendedor N. 2*
I 7	Injector No.1	*Injecteur no.1*	*Inyector N. 1*
I 8	Injector No.2	*Injecteur no.2*	*Inyector N. 2*
I 9	Injector No.3	*Injecteur no.3*	*Inyector N. 3*
I 10	Injector No.4	*Injecteur no.4*	*Inyector N. 4*
I 13	Intake Air Temp. Sensor	*Capteur de température d'air d'admission*	*Sensor de la temperatura del aire de admisión*
I 14	ISC Valve	*Soupape ISC*	*Válvula ISC*
K 1	Knock Sensor	*Capteur de cognement moteur*	*Sensor de golpeteo*
N 1	Neutral Start SW, A/T Indicator Light SW and Back-Up Light SW	*Contacteur de démarrage au point mort, contacteur d'indicateur A/T et contacteur de feux de recul*	*Interruptor de arranque en punto muerto, interruptor de la luz indicadora de A/T e interruptor de la luz de marcha atrás*
N 3	Noise Filter (Ignition System)	*Filtre anti-parasites (système d'allumage)*	*Filtro contra el ruido (sistema de encendido)*
O 1	Oil Pressure SW	*Manocontact de pression d'huile*	*Interruptor de presión de aceite*
P 1	Power Steering Oil Pressure SW	*Manocontact de pression d'huile de direction assist*	*Interruptor de la presión de aceite de la servodirección*
R 1	Radiator Fan Motor	*Moteur d'entraînement de ventilateur électrique de radiateur*	*Motor del ventilador del radiador*
S 1	Speed Sensor (Combination Meter)	*Capteur de vitesse (combiné de bord)*	*Sensor de velocidad (medidor de combinación)*
S 3	Starter	*Démarreur*	*Arrancador*
S 4	Starter	*Démarreur*	*Arrancador*
T 1	Throttle Position Sensor	*Capteur de position de papillon d'accélération*	*Sensor de posición del acelerador*
V 1	Vacuum Sensor	*Capteur de dépression*	*Sensor de vacío*
V 2	Variable Resistor	*Résistance variable*	*Resistor variable*
V 4	VSV (EGR)	*VSV (EGR)*	*VSV (EGR)*
W 1	Washer Motor	*Moteur de lave-glace*	*Motor del lavador*
W 2	Water Temp. Sender	*Jauge émettrice de température d'eau*	*Emisor de la temperatura del agua*
W 3	Water Temp. SW No.1	*Contacteur thermoélectrique no.1*	*Interruptor de la temperatura del agua N. 1*

Position of Parts in Instrument Panel

[LHD]

English

*1:1MZ-FE
*2:5S-FE

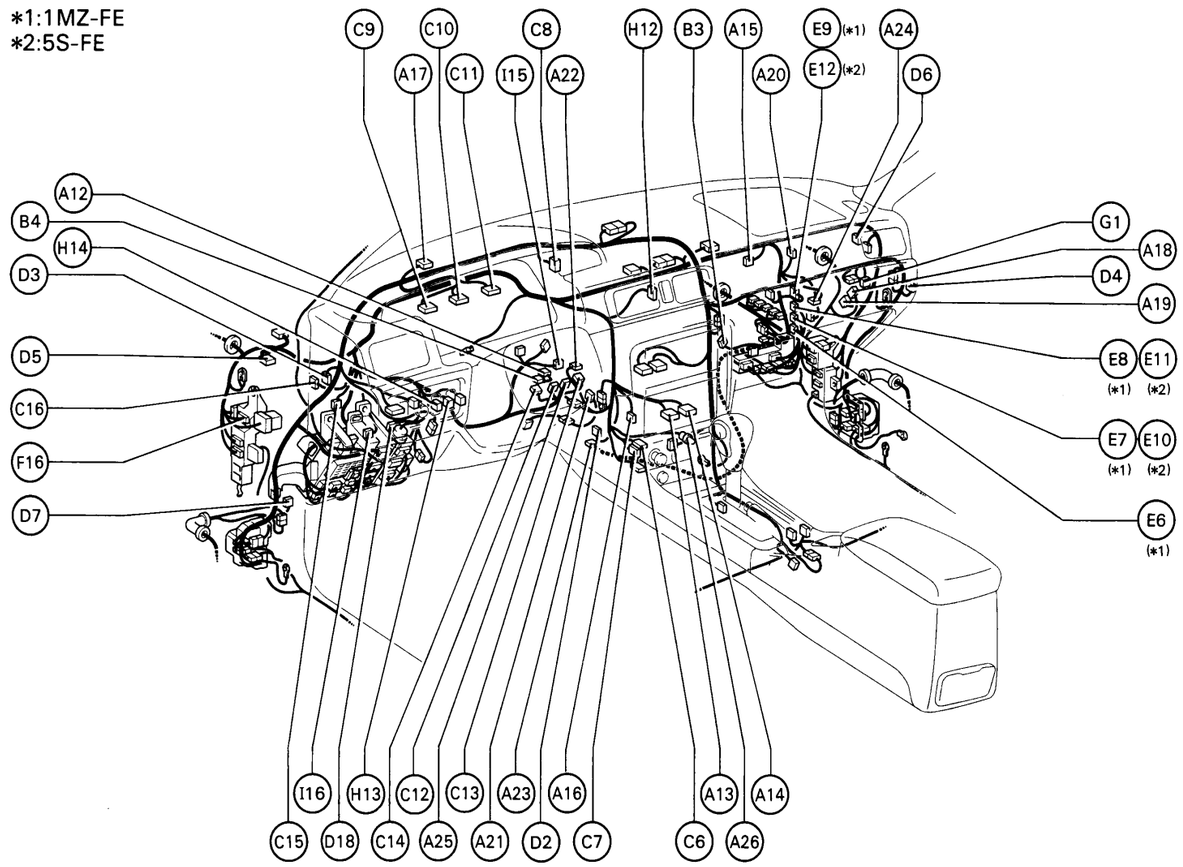

Position of Parts in Instrument Panel

Code	English	*Français*	*Español*
A 12	A/C Blower Motor Linear Controller	*Contrôleur linéaire de magnétoscope de soufflerie de A/C*	*Controlador lineral del motor del soplador del A/C*
A 13	A/C ECU	*ECU A/C*	*ECU del A/C*
A 14	A/C ECU	*ECU A/C*	*ECU del A/C*
A 15	A/C Evaporator Temp. Sensor	*Capteur de température de l'evaporateur A/C*	*Sensor del temperatura del evaporador del A/C*
A 16	A/C Room Temp. Sensor	*Capteur de température de l'habitacle A/C*	*Sensor del temperatura del compartimiento del A/C*
A 17	A/C Solar Sensor	*Capteur solaire A/C*	*Sensor solar del A/C*
A 18	ABS ECU	*ECU ABS*	*ECU del ABS*
A 19	ABS ECU	*ECU ABS*	*ECU del ABS*
A 20	Air Inlet Control Servo Motor	*Servomoteur de commande d'admission d'air*	*Servomotor de control de la entrada de aire*
A 21	Air Mix Control Servo Motor	*Servomoteur de commande de mélange d'air*	*Servomotor de control de mezcla de aire*
A 22	Air Vent Mode Control Servo Motor	*Servomoteur de commande de mode de ventilation*	*Servomotor de control del modo de ventilación de aire*
A 23	Airbag Sensor Assembly	*Ensemble de capteur de sac gonflable*	*Conjunto del sensor del colchón de aire*
A 24	Airbag Squib (Front Passenger Airbag Assembly)	*Charge explosive de sac gonflable (Ensemble de sac gonflable de passager avant)*	*Detonador del colchón de aire (conjunto del colchón de aire del pasajero delantero)*
A 25	Airbag Squib (Steering Wheel Pad)	*Charge explosive de sac gonflable (rembourrage de volant de direction)*	*Detonador del colchón de aire (almohadilla del volante de dirección)*
A 26	Ashtray Illumination	*Éclairage de cendrier*	*Iluminación del cenicero*
B 3	Blower Motor	*Moteur de soufflerie*	*Motor del soplador*
B 4	Blower Resistor	*Résistance de soufflerie*	*Resistor del soplador*
C 6	Cigarette Lighter	*Allume-cigare*	*Encendedor de cigarrillos*
C 7	Cigarette Lighter Illumination	*Éclairage d'allume-cigare*	*Iluminación del encendedor de cigarrillos*
C 8	Clock	*Montre électrique de bord*	*Reloj*
C 9	Combination Meter	*Combiné de bord*	*Medidor de combinación*
C 10	Combination Meter	*Combiné de bord*	*Medidor de combinación*
C 11	Combination Meter	*Combiné de bord*	*Medidor de combinación*
C 12	Combination SW	*Commande combinée*	*Interruptor de combinación*
C 13	Combination SW	*Commande combinée*	*Interruptor de combinación*
C 14	Combination SW	*Commande combinée*	*Interruptor de combinación*
C 15	Cruise Control Clutch SW	*Contacteur d'embrayage de contrôl de croisière*	*Interruptor del embrague de control de crucero*
C 16	Cruise Control ECU	*ECU de contrôle de croisière*	*ECU del control de crucero*
D 2	Daytime Running Light Relay	*Relais de dispositifs d'éclairage de conduite de jour*	*Relé de la luz de marcha diurna*
D 3	Diode (Dome)	*Diode (Dome)*	*Diode (Dome)*
D 4	Diode (Door Courtesy)	*Diode (d'éclairage de courtoisie sur porte)*	*Diode (cortesía de la puerta)*
D 5	Diode (Front Fog Light)	*Diode (Projecteur antibrouillard avant)*	*Diode (Luz antiniebla frontal)*
D 6	Diode (Idle-Up)	*Diode (de régime ralenti accéléré)*	*Diode (aumento del ralentí)*
D 7	Diode (Interior Light)	*Diode (de plafonnier)*	*Diode (luz interior)*
D 18	DLC3	*DLC3*	*DLC3*
E 6	Engine and ECT ECU	*ECU moteur et ECT*	*ECU del motor y ECT*
E 7	Engine and ECT ECU	*ECU moteur et ECT*	*ECU del motor y ECT*
E 8	Engine and ECT ECU	*ECU moteur et ECT*	*ECU del motor y ECT*
E 9	Engine and ECT ECU	*ECU moteur et ECT*	*ECU del motor y ECT*
E 10	Engine ECU (M/T), Engine and ECT ECU (A/T)	*ECU moteur (M/T), ECU moteur et ECT (A/T)*	*ECU del motor (M/T), ECU del motor y ECT (A/T)*
E 11	Engine ECU (M/T), Engine and ECT ECU (A/T)	*ECU moteur (M/T), ECU moteur et ECT (A/T)*	*ECU del motor (M/T), ECU del motor y ECT (A/T)*
E 12	Engine ECU (M/T), Engine and ECT ECU (A/T)	*ECU moteur (M/T), ECU moteur et ECT (A/T)*	*ECU del motor (M/T), ECU del motor y ECT (A/T)*
F 16	Front Fog Light Relay	*Relais de projecteurs antibrouillard avant*	*Relé de las luces antiniebla delanteras*
G 1	Glove Box Light SW	*Contacteur d'éclairage de boîte à gants*	*Interruptor de la luz de la caja de la guantera*
H 12	Hazard SW	*Commande de feux de détresse*	*Interruptor de peligro*
H 13	Headlight Beam Level Control SW	*Commande de dispositif de réglage d'orientation de faisceau de projecteurs*	*Interruptor de control del nivel del haz del faro*
H 14	Headlight Cleaner SW	*Commande de lave-projecteurs*	*Interruptor del limpiador del faro*
I 15	Ignition SW	*Contacteur d'allumage*	*Interruptor de encendido*
I 16	Integration Relay	*Relais d'intégration*	*Relé de integración*

English Français Español

Position of Parts in Instrument Panel

[LHD]

*1:1MZ-FE
*2:5S-FE

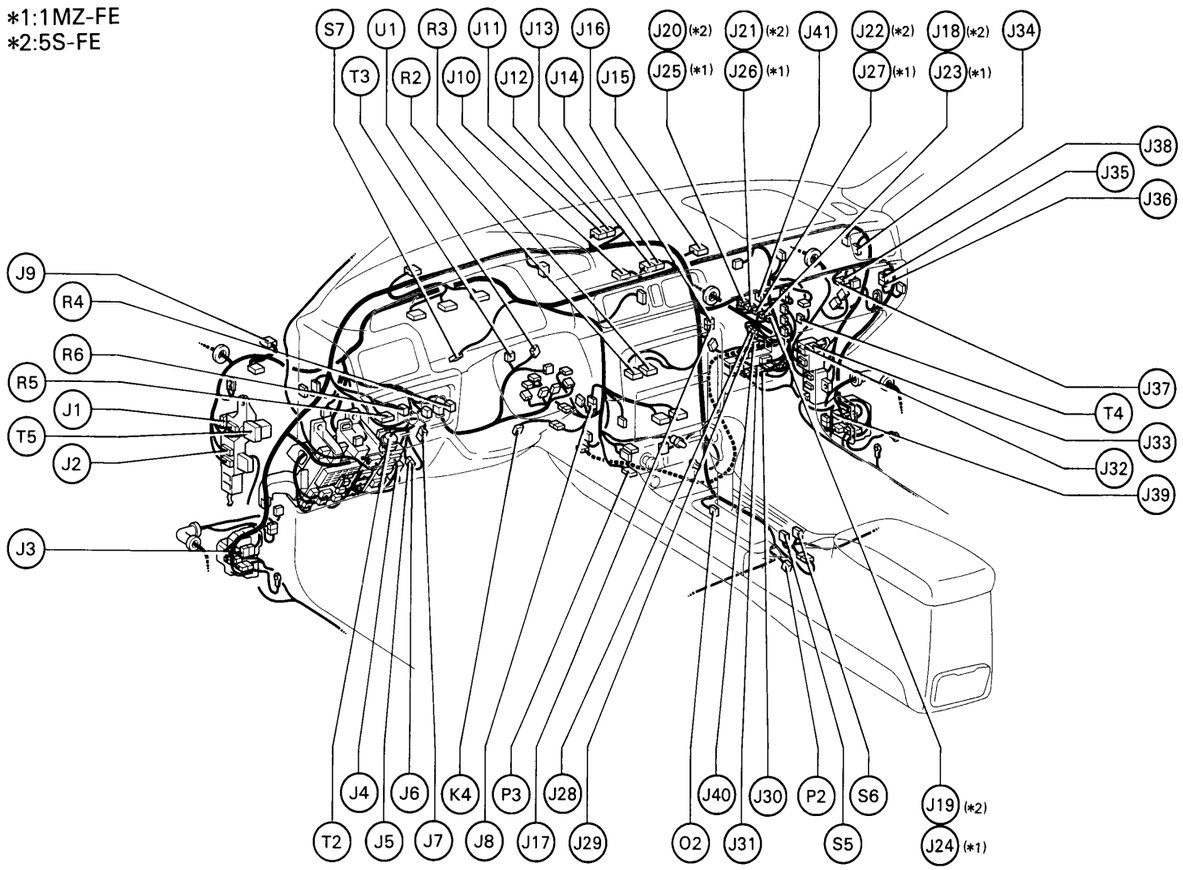

Position of Parts in Instrument Panel

Code	English	*Français*	*Español*
J 1	Junction Connector	*Bloc raccord de jonction*	*Conector de unión*
J 2	Junction Connector	*Bloc raccord de jonction*	*Conector de unión*
J 3	Junction Connector	*Bloc raccord de jonction*	*Conector de unión*
J 4	Junction Connector	*Bloc raccord de jonction*	*Conector de unión*
J 5	Junction Connector	*Bloc raccord de jonction*	*Conector de unión*
J 6	Junction Connector	*Bloc raccord de jonction*	*Conector de unión*
J 7	Junction Connector	*Bloc raccord de jonction*	*Conector de unión*
J 8	Junction Connector	*Bloc raccord de jonction*	*Conector de unión*
J 9	Junction Connector	*Bloc raccord de jonction*	*Conector de unión*
J 10	Junction Connector	*Bloc raccord de jonction*	*Conector de unión*
J 11	Junction Connector	*Bloc raccord de jonction*	*Conector de unión*
J 12	Junction Connector	*Bloc raccord de jonction*	*Conector de unión*
J 13	Junction Connector	*Bloc raccord de jonction*	*Conector de unión*
J 14	Junction Connector	*Bloc raccord de jonction*	*Conector de unión*
J 15	Junction Connector	*Bloc raccord de jonction*	*Conector de unión*
J 16	Junction Connector	*Bloc raccord de jonction*	*Conector de unión*
J 17	Junction Connector	*Bloc raccord de jonction*	*Conector de unión*
J 18	Junction Connector	*Bloc raccord de jonction*	*Conector de unión*
J 19	Junction Connector	*Bloc raccord de jonction*	*Conector de unión*
J 20	Junction Connector	*Bloc raccord de jonction*	*Conector de unión*
J 21	Junction Connector	*Bloc raccord de jonction*	*Conector de unión*
J 22	Junction Connector	*Bloc raccord de jonction*	*Conector de unión*
J 23	Junction Connector	*Bloc raccord de jonction*	*Conector de unión*
J 24	Junction Connector	*Bloc raccord de jonction*	*Conector de unión*
J 25	Junction Connector	*Bloc raccord de jonction*	*Conector de unión*
J 26	Junction Connector	*Bloc raccord de jonction*	*Conector de unión*
J 27	Junction Connector	*Bloc raccord de jonction*	*Conector de unión*
J 28	Junction Connector	*Bloc raccord de jonction*	*Conector de unión*
J 29	Junction Connector	*Bloc raccord de jonction*	*Conector de unión*
J 30	Junction Connector	*Bloc raccord de jonction*	*Conector de unión*
J 31	Junction Connector	*Bloc raccord de jonction*	*Conector de unión*
J 32	Junction Connector	*Bloc raccord de jonction*	*Conector de unión*
J 33	Junction Connector	*Bloc raccord de jonction*	*Conector de unión*
J 34	Junction Connector	*Bloc raccord de jonction*	*Conector de unión*
J 35	Junction Connector	*Bloc raccord de jonction*	*Conector de unión*
J 36	Junction Connector	*Bloc raccord de jonction*	*Conector de unión*
J 37	Junction Connector	*Bloc raccord de jonction*	*Conector de unión*
J 38	Junction Connector	*Bloc raccord de jonction*	*Conector de unión*
J 39	Junction Connector	*Bloc raccord de jonction*	*Conector de unión*
J 40	Junction Connector	*Bloc raccord de jonction*	*Conector de unión*
J 41	Junction Connector	*Bloc raccord de jonction*	*Conector de unión*
K 4	Kick Down SW	*Contacteur au pied de rétrogradation forcée*	*Interruptor del retirador*
O 2	O/D Main SW and A/T Shift Lever Illumination	*Éclairage de commutateur principale O/D et de levier de ohangement de vitesses de boîte de A/T*	*Interruptor principal de O/D e iluminación de la palanca de cambios de la A/T*
P 2	Parking Brake SW	*Contacteur de frein de stationnement*	*Interruptor del freno de estacionamiento*
P 3	Power Outlet	*Prise d'alimentation*	*Toma de alimentacion*
R 2	Radio and Player	*Autoradio et lecteur de cassettes*	*Radio y reproductor*
R 3	Radio and Player	*Autoradio et lecteur de cassettes*	*Radio y reproductor*
R 4	Rear Fog Light SW	*Commande de projecteurs antibrouillard arrière*	*Interruptor de las luces antiniebla traseras*
R 5	Remote Control Mirror SW	*Commande de rétroviseur à commande électrique*	*Interruptor del espejo retrovisor de control remoto*
R 6	Rheostat	*Rhéostat*	*Reóstato*
S 5	Seat Heater SW (Driver's Seat)	*Commande de chauffage de siège (côté conducteur)*	*Interruptor del calefactor del asiento (asiento del conductor)*
S 6	Seat Heater SW (Front Passenger's Seat)	*Commande de chauffage de siège (siège de passager avant)*	*Interruptor del calefactor del asiento (asiento del pasajero delantero)*
S 7	Stop Light SW	*Contacteur de feux stop*	*Interruptor de la luz de parada*
T 2	TDCL	*TDCL*	*TDCL*
T 3	Transponder Key Amplifier	*Amplificateur de clé de transpondeur*	*Amplificador de la llave de retransmisor*
T 4	Transponder Key Computer	*Ordinateur de clé de transpondeur*	*Computadora de la llave de retransmisor*
T 5	Turn Signal Flasher	*Central clignotant de clignotants*	*Intermitente de la señal de giro*
U 1	Unlock Warning SW (Ignition Key)	*Contacteur de rappel de libération (Clé de contact)*	*Interruptor de advertencia de desbloqueo (Llave de encendido)*

Position of Parts in Body

[LHD]

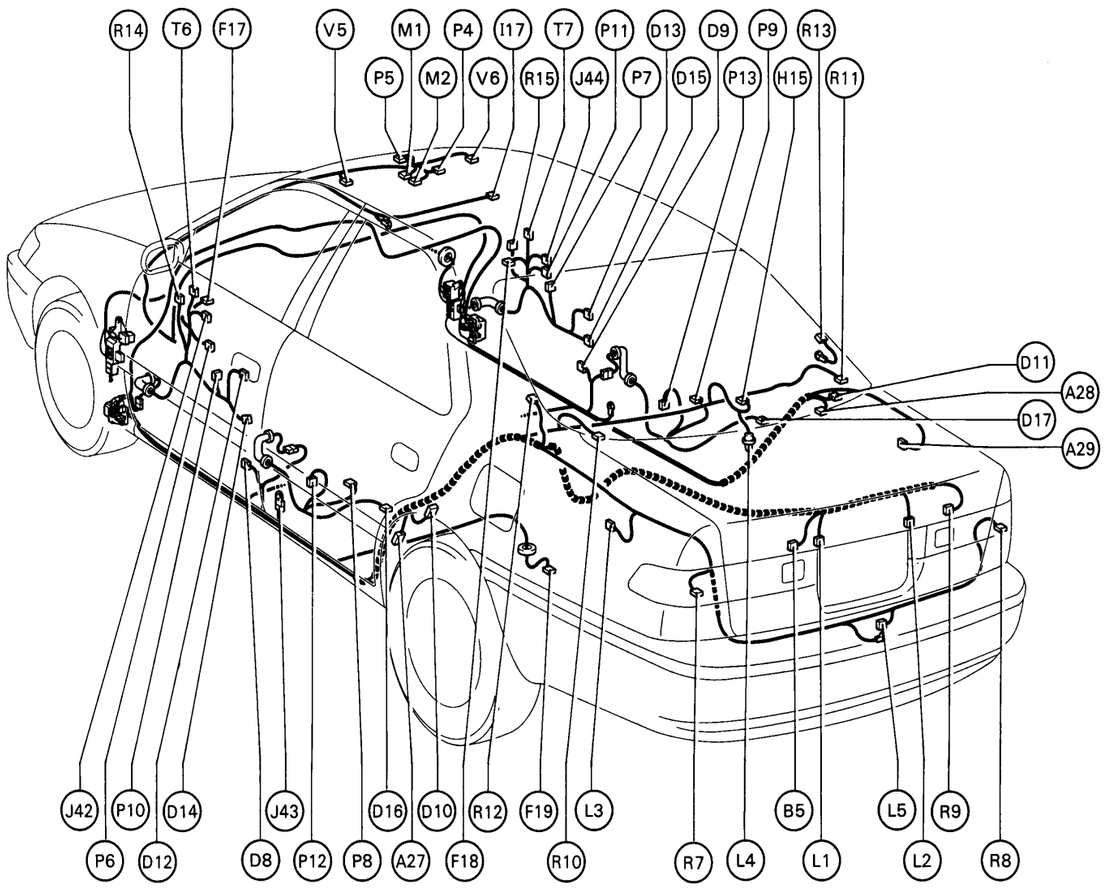

Position of Parts in Body

Code	English	*Français*	*Español*
A 27	ABS Speed Sensor Rear LH	*Capteur de vitesse arrière gauche ABS*	*Sensor de velocidad del ABS trasero izquierda*
A 28	ABS Speed Sensor Rear RH	*Capteur de vitesse arrière droit ABS*	*Sensor de velocidad del ABS trasero derecha*
A 29	Auto Antenna Relay and Motor	*Relais et moteur d'antenne électrique*	*Relé y motor de la antena eléctrica*
B 5	Back-Up Light	*Feux de recul*	*Luz de marcha atrás*
D 8	Door Courtesy SW Front LH	*Contacteur d'éclairage de courtoisie sur porte avant gauche*	*Interruptor de la cortesía de la puerta frontal izquierda*
D 9	Door Courtesy SW Front RH	*Contacteur d'éclairage de courtoisie sur porte avant droit*	*Interruptor de la cortesía de la puerta frontal derecha*
D 10	Door Courtesy SW Rear LH	*Contacteur d'éclairage de courtoisie sur porte arrière gauche*	*Interruptor de la cortesía de la puerta trasero izquierda*
D 11	Door Courtesy SW Rear RH	*Contacteur d'éclairage de courtoisie sur porte arrière droit*	*Interruptor de la cortesía de la puerta trasero derecha*
D 12	Door Key Lock and Unlock SW Front LH	*Contacteur de condamnation et de libération de serrure de porte avec la clé avant gauche*	*Interruptor de bloqueo y desbloqueo de la puerta frontal izquierda*
D 13	Door Key Lock and Unlock SW Front RH	*Contacteur de condamnation et de libération de serrure de porte avec la clé avant droit*	*Interruptor de bloqueo y desbloqueo de la puerta-frontal derecha*
D 14	Door Lock Motor and Door Unlock Detection SW Front LH	*Moteur de condamnation de porte et contacteur de libération de porte avant gauche*	*Motor de bloqueo de la puerta y interruptor de desbloqueo de la puerta frontal izquierda*
D 15	Door Lock Motor and Door Unlock Detection SW Front RH	*Moteur de condamnation de porte et contacteur de libération de porte avant droit*	*Motor de bloqueo de la puerta y interruptor de desbloqueo de la puerta frontal derecha*
D 16	Door Lock Motor and Door Unlock Detection SW Rear LH	*Moteur de condamnation de porte et contacteur de libération de porte arriére gauche*	*Motor de bloqueo de la puerta y interruptor de desbloqueo de la puerta trasera izquierda*
D 17	Door Lock Motor and Door Unlock Detection SW Rear RH	*Moteur de condamnation de porte et contacteur de libération de porte arriére droit*	*Motor de bloqueo de la puerta y interruptor de desbloqueo de la puerta trasera derecha*
F 17	Front Door Speaker LH	*Haut-parleur de porte avant gauche*	*Altavoz izquierda de la puerta frontal*
F 18	Front Door Speaker RH	*Haut-parleur de porte avant droit*	*Altavoz derecha de la puerta frontal*
F 19	Fuel Pump and Sender	*Pompe d'alimentation et jauge émettrice de niveau d'essence*	*Bomba de combustible y emisor*
H 15	High Mounted Stop Light	*Feux stop à implantation haute*	*Luz de parada de montura alta*
I 17	Interior Light	*Plafonnier*	*Luz interior*
J 42	Junction Connector	*Bloc raccord de jonction*	*Conector de unión*
J 43	Junction Connector	*Bloc raccord de jonction*	*Conector de unión*
J 44	Junction Connector	*Bloc raccord de jonction*	*Conector de unión*
L 1	License Plate Light LH	*Éclairage de plaque minéralogique gauche*	*Luz de la matrícula izquierda*
L 2	License Plate Light RH	*Éclairage de plaque minéralogique droit*	*Luz de la matrícula derecha*
L 3	Light Failure Sensor	*Capteur de défaut d'éclairage*	*Sensor de fallo de las luces*
L 4	Luggage Compartment Light	*Éclairage de compartiment à bagages*	*Luz del portaequipajes*
L 5	Luggage Compartment Light SW	*Contacteur d'éclairage de compartiment à bagages*	*Interruptor de la luz del portaequipajes*
M 1	Moon Roof Control SW and Control Relay	*Commutateur de commande de toit ouvrant et relais de commande*	*Interruptor de control del techo deslizante lunar y relé de control*
M 2	Moon Roof Motor and Limit SW	*Contacteur de limité et moteur de toit ouvrant transparent*	*Interruptor de motor y limitador del techo transparente*
P 4	Personal Light	*Projecteur individuel*	*Luz personal*
P 5	Personal Light	*Projecteur individuel*	*Luz personal*
P 6	Power Window Control Relay and Motor	*Moteur et relais de lève-glace électrique lève-glace électrique de glace de custode*	*Motor y relé de contorol de las ventanillas automáticas*
P 7	Power Window Control SW (Front Passenger's Side)	*Commande de lève-glace électrique (côté passager avant)*	*Interruptor de control de la ventanilla automática (lado del pasajero delantero)*
P 8	Power Window Control SW Rear LH	*Commande de lève-glace électrique arrière gauche*	*Interruptor de control de la ventanilla automática trasero izquierda*
P 9	Power Window Control SW Rear RH	*Commande de lève-glace électrique arrière droit*	*Interruptor de control de la ventanilla automática trasero derecha*
P 10	Power Window Master SW	*Commande générale de lève-glace électrique*	*Interruptor principal de la ventanilla automática*
P 11	Power Window Motor (Front Passenger's Side)	*Moteur d'entraînement de lève-glace électrique (côté passager avant)*	*Motor de la ventanilla automática (lado del pasajero delantero)*
P 12	Power Window Motor Rear LH	*Moteur d'entraînement de lève-glace électrique arrière gauche*	*Motor de la ventanilla automática trasera izquierda*
P 13	Power Window Motor Rear RH	*Moteur d'entraînement de lève-glace électrique arrière droit*	*Motor de la ventanilla automática trasera derecha*
R 7	Rear Combination Light LH	*Éclairage combiné arrière gauche*	*Luz de combinación trasera izquierda*
R 8	Rear Combination Light RH	*Éclairage combiné arrière droit*	*Luz de combinación trasera derecha*
R 9	Rear Fog Light	*Projecteur antibrouillard arrière*	*Luz antiniebla trasera*
R 10	Rear Speaker LH	*Haut-parleur de portière arrière gauche*	*Altavoz de la puerta trasera izquierda*
R 11	Rear Speaker RH	*Haut-parleur de portière arrière droit*	*Altavoz de la puerta trasera derecha*
R 12	Rear Window Defogger (+)	*Désembueur de lunette arrière (+)*	*Desempañador de la ventanilla trasera (+)*
R 13	Rear Window Defogger (−)	*Désembueur de lunette arrière (−)*	*Desempañador de la ventanilla trasera (−)*
R 14	Remote Control Mirror LH	*Rétroviseur à commande électrique gauche*	*Espejo retrovisor de control remoto izquierda*
R 15	Remote Control Mirror RH	*Rétroviseur à commande électrique droit*	*Espejo retrovisor de control remoto derecha*
T 6	Tweeter Speaker LH	*Tweeter gauche*	*Altavoz de agudos izquierda*
T 7	Tweeter Speaker RH	*Tweeter droit*	*Altavoz de agudos derecha*
V 5	Vanity Light LH	*Eclairage de miroir gauche*	*Luz del espejo interior izquierda*
V 6	Vanity Light RH	*Eclairage de miroir droit*	*Luz del espejo interior derecha*

Position of Parts in Seat

[LHD]

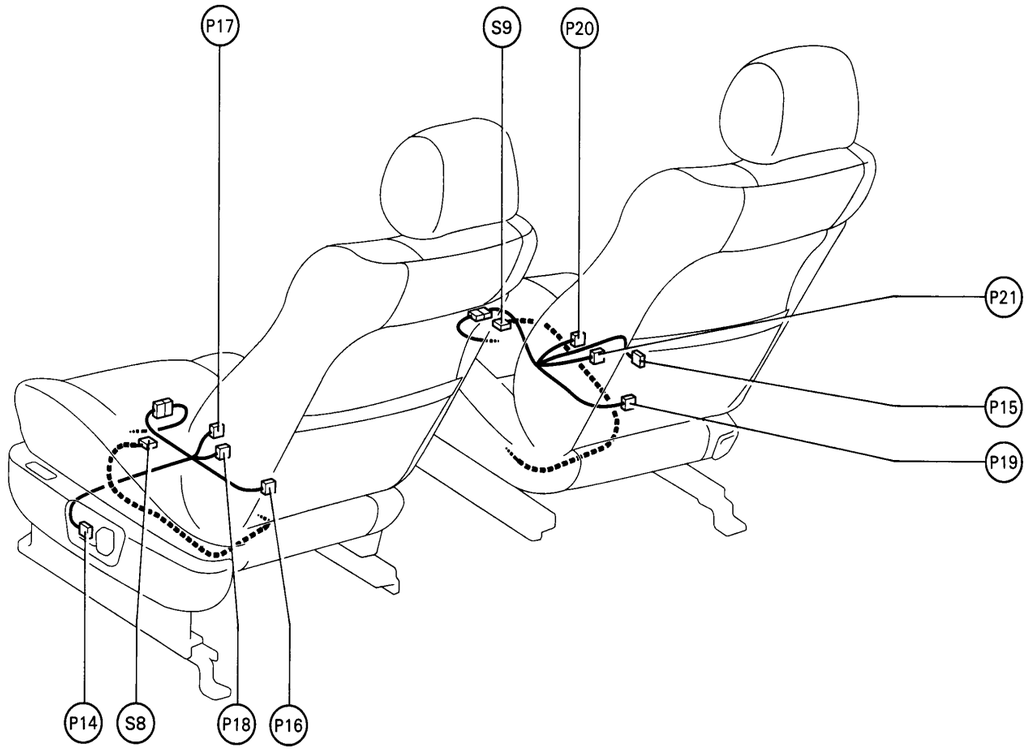

[RHD]

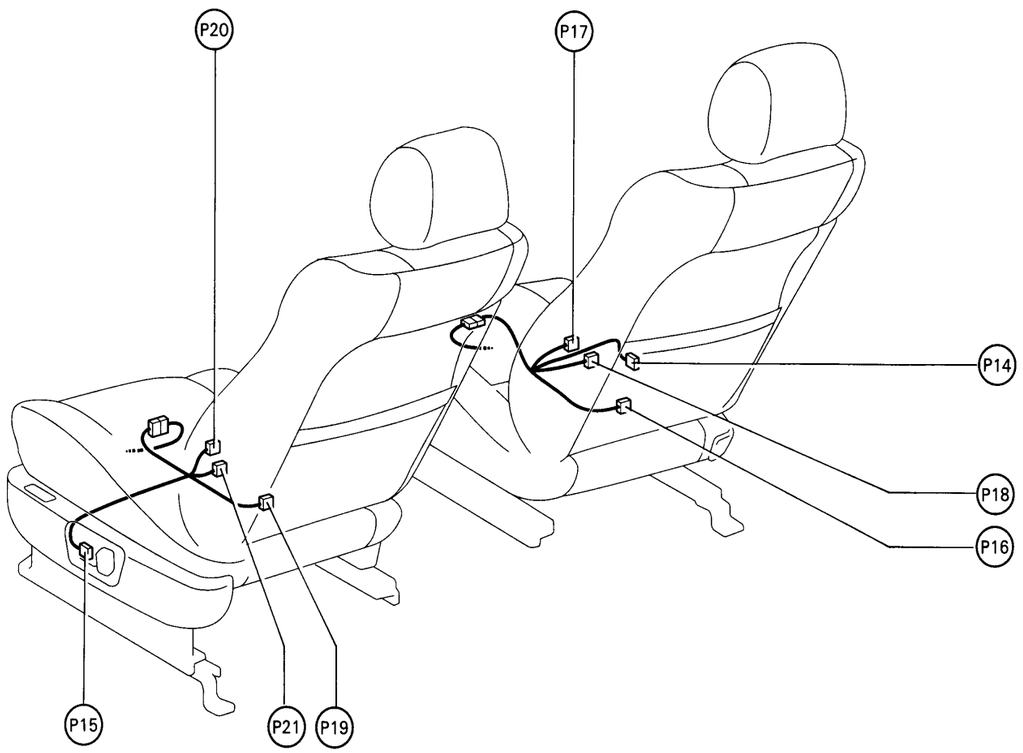

Position of Parts in Seat

Code	English	*Français*	*Español*
P 14	Power Seat Control SW (Driver's Seat)	*Contacteur de contrôle de siège électrique (siège du conducteur)*	*Interruptor de control del asiento automático (asiento del conductor)*
P 15	Power Seat Control SW (Front Passenger's Seat)	*Contacteur de contrôle de siège électrique (siège du passager avant)*	*Interruptor de control del asiento automático (asiento del pasajero delantero)*
P 16	Power Seat Motor (Driver's Seat Reclining Control)	*Moteur de siège à commande électrique (contrôle de l'inclinasion du siège du conducteur)*	*Motor del asiento automático (control de reclinacion del asiento del conductor)*
P 17	Power Seat Motor (Driver's Seat Slide Control)	*Moteur de siège à commande électrique (contrôle glissement du siège du conducteur)*	*Motor del asiento automático (control de slizante del asiento del conductor)*
P 18	Power Seat Motor (Driver's Seat Vertical Control)	*Moteur de siège à commande électrique (réglage vertical de siège de conducteur)*	*Motor del asiento automático (control vertical del asiento del conductor)*
P 19	Power Seat Motor (Front Passenger's Seat Reclining Control)	*Moteur de siège à commande électrique (contrôle de l'inclinasion du siège du passager avant)*	*Motor del asiento automático (control de reclinacion del asiento del pasajero delantero)*
P 20	Power Seat Motor (Front Passenger's Seat Slide Control)	*Moteur de siège à commande électrique (contrôle glissement du siège du passager avant)*	*Motor del asiento automático (control de slizante del asiento del pasajero delantero)*
P 21	Power Seat Motor (Front Passenger's Seat Vertical Control)	*Moteur de siège à commande électrique (réglage vertical de siège de passager avant)*	*Motor del asiento automático (control vertical del asiento del pasajero delantero)*
S 8	Seat Heater (Driver's Seat)	*Chauffage de siège (côté conducteur)*	*Calefactor del asiento (asiento del conductor)*
S 9	Seat Heater (Front Passenger's Seat)	*Chauffage de siège (siège de passager avant)*	*Calefactor del asiento (asiento del pasajero delantero)*

▭ : Location of Connector Joining Wire Harness and Wire Harness

▽ : Location of Ground Points

[1MZ-FE LHD]

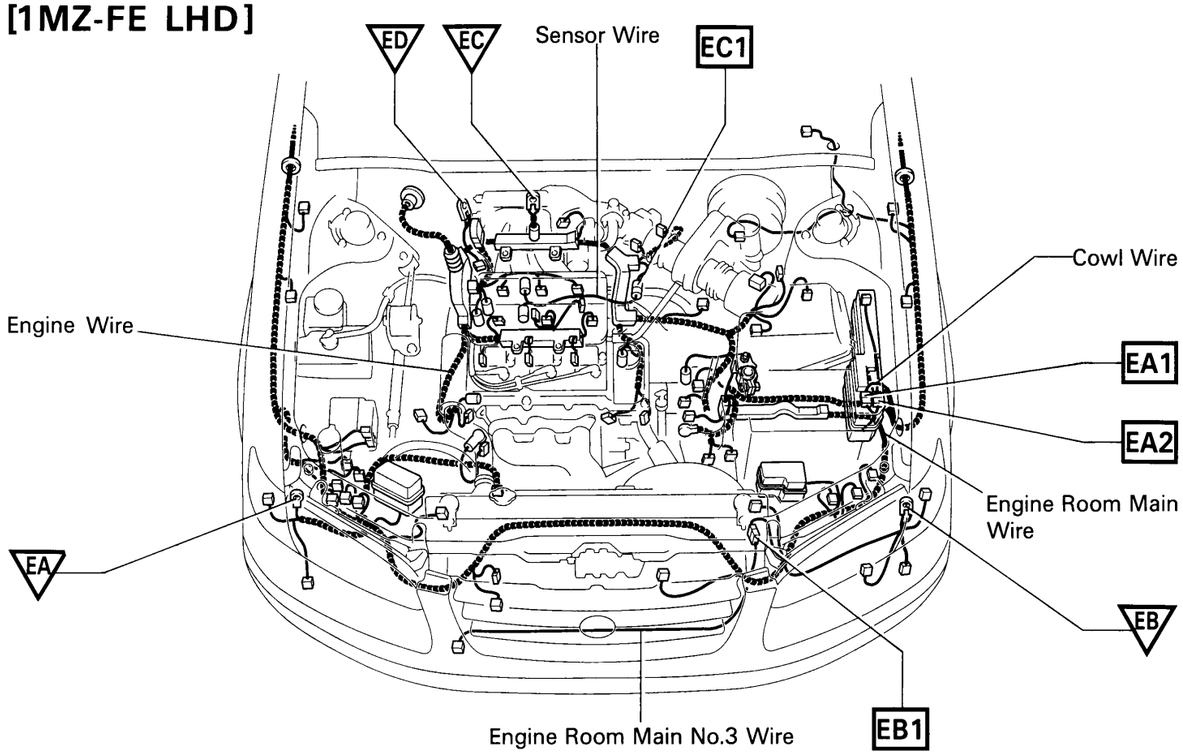

○ : Location of Splice Points

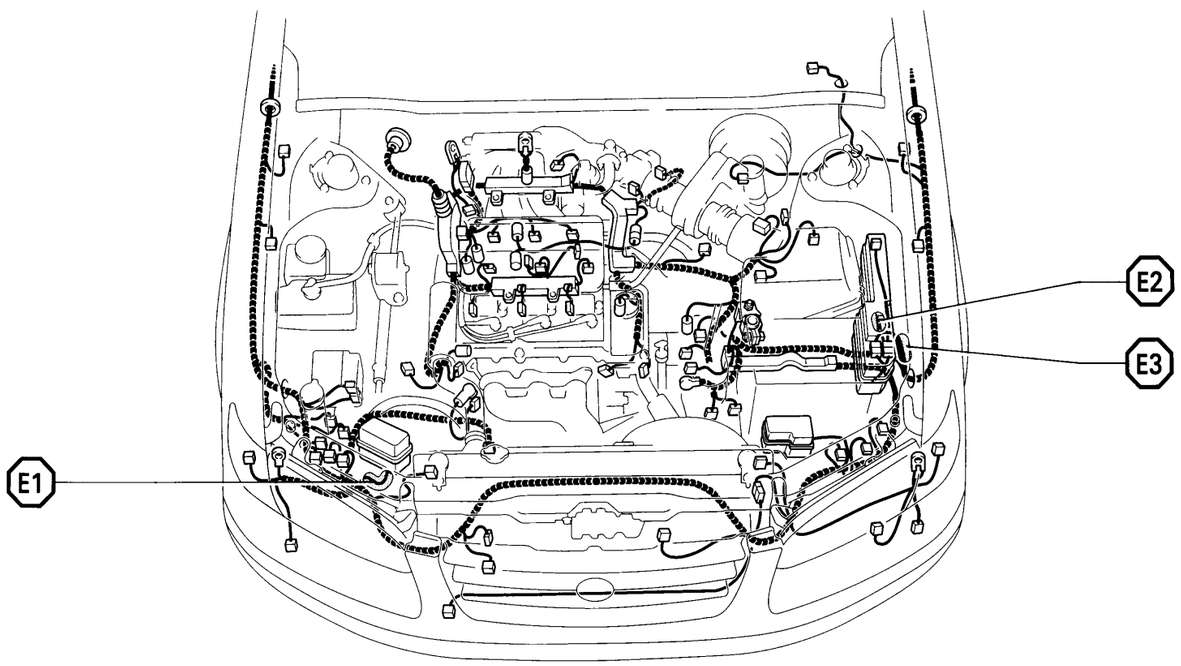

Connector Joining Wire Harness and Wire Harness

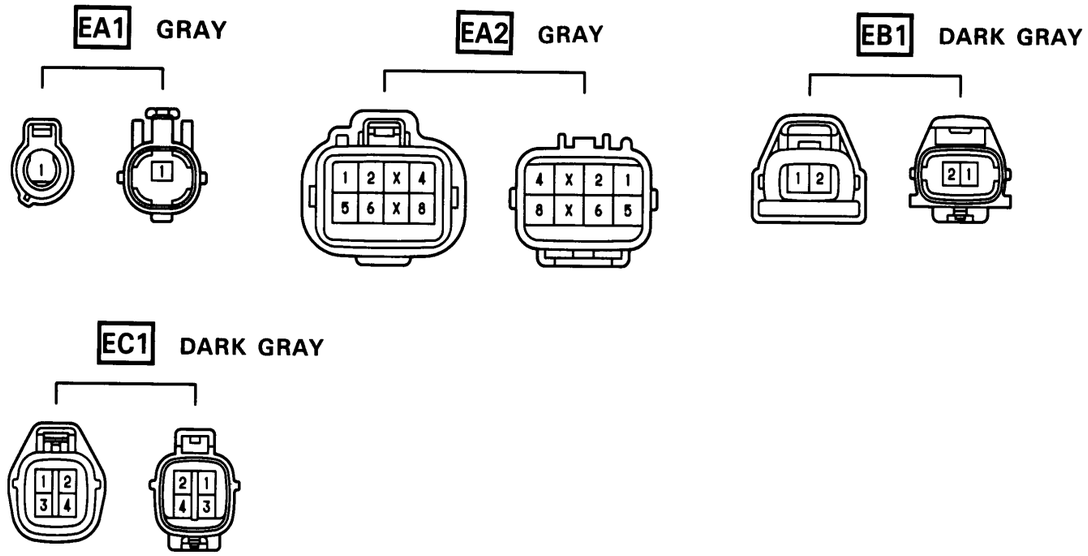

CODE	JOINING WIRE HARNESS AND WIRE HARNESS (CONNECTOR LOCATION)
EA1	COWL WIRE AND ENGINE ROOM MAIN WIRE (UNDER THE ENGINE ROOM J/B NO.2)
EA2	
EB1	ENGINE ROOM MAIN WIRE AND ENGINE ROOM MAIN NO.3 WIRE (RADIATOR LH)
EC1	ENGINE WIRE AND SENSOR WIRE (HEAD COVER RH)

▭ : Location of Connector Joining Wire Harness and Wire Harness

▽ : Location of Ground Points

[5S-FE LHD]

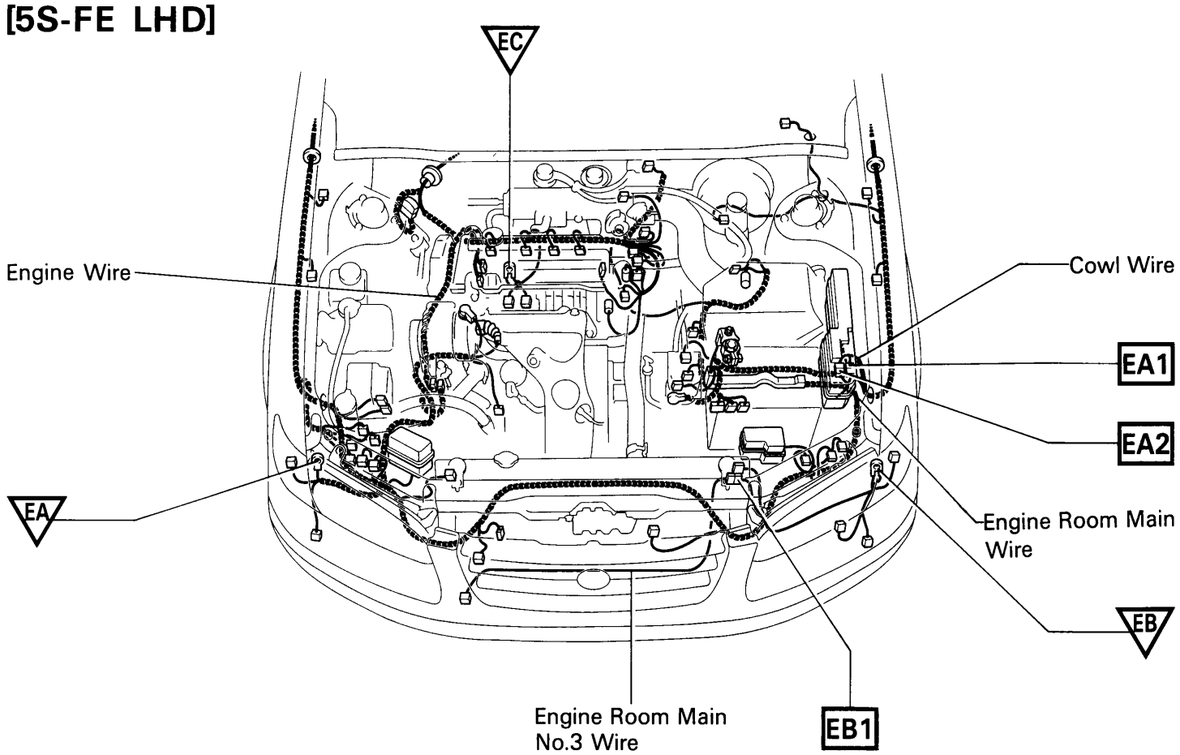

⬡ : Location of Splice Points

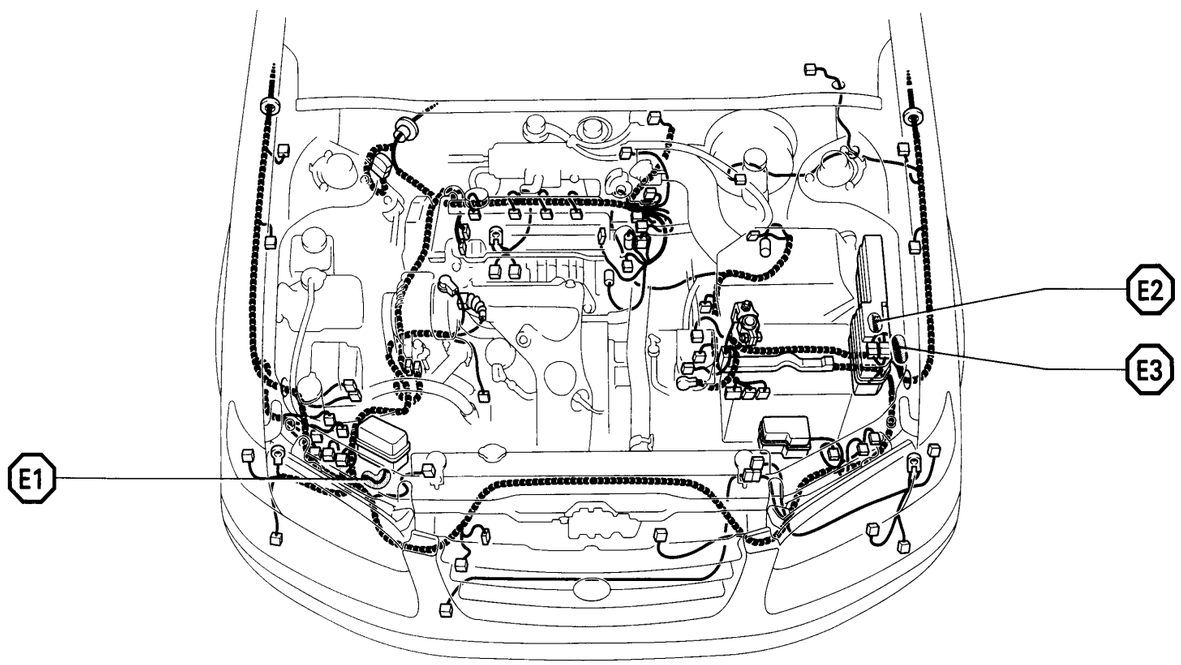

Connector Joining Wire Harness and Wire Harness

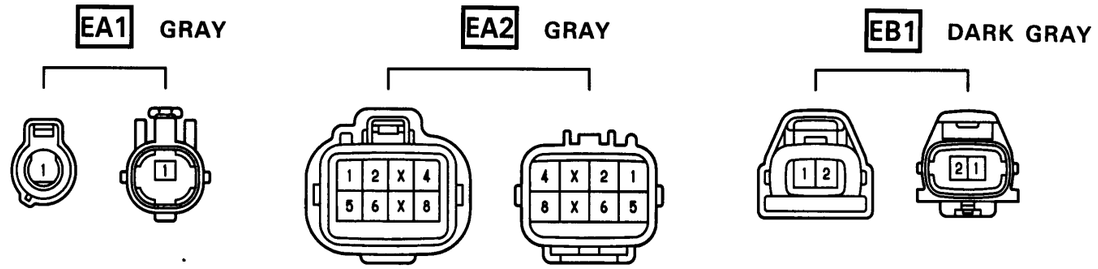

CODE	JOINING WIRE HARNESS AND WIRE HARNESS (CONNECTOR LOCATION)
EA1	COWL WIRE AND ENGINE ROOM MAIN WIRE (UNDER THE ENGINE ROOM J/B NO.2)
EA2	
EB1	ENGINE ROOM MAIN WIRE AND ENGINE ROOM MAIN NO.3 WIRE (RADIATOR LH)

▭: Location of Connector Joining Wire Harness and Wire Harness

[LHD]

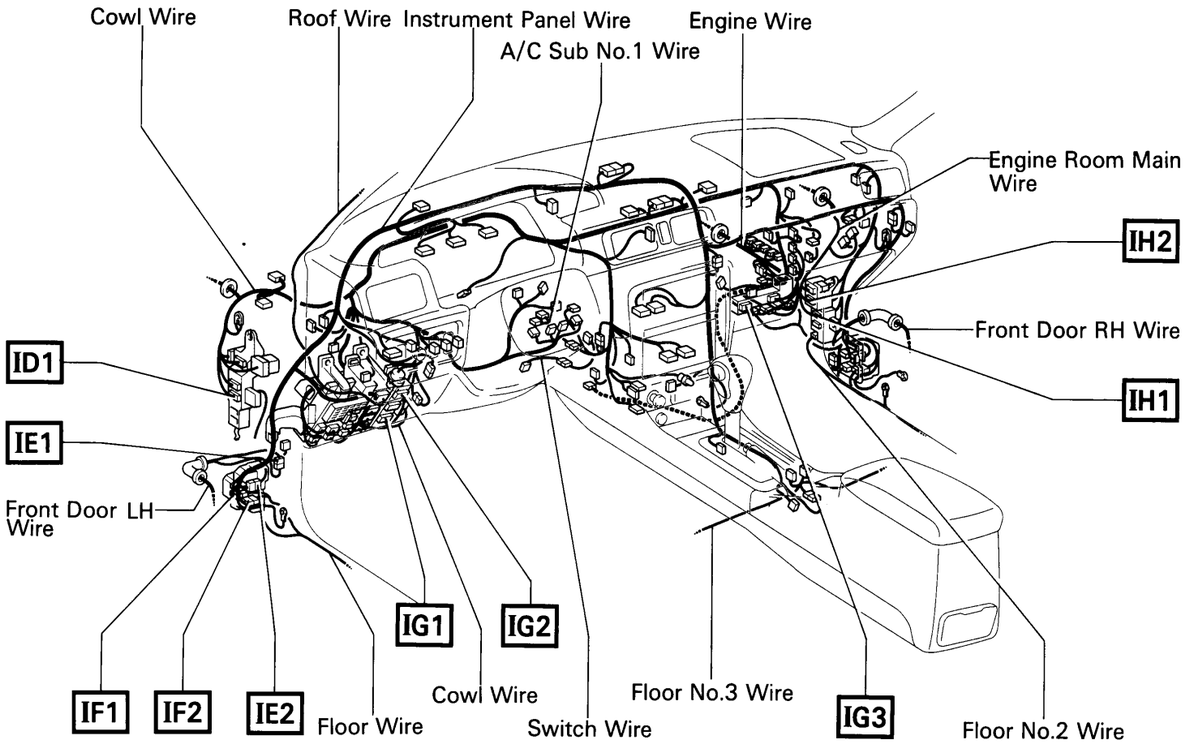

▽: Location of Ground Points

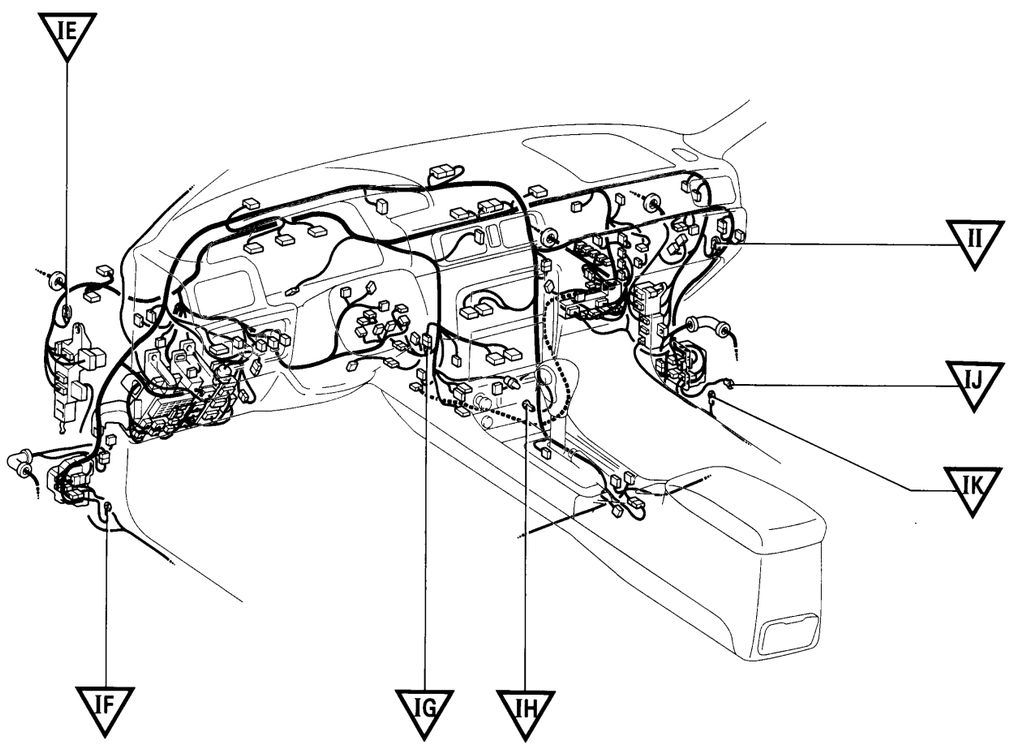

Connector Joining Wire Harness and Wire Harness

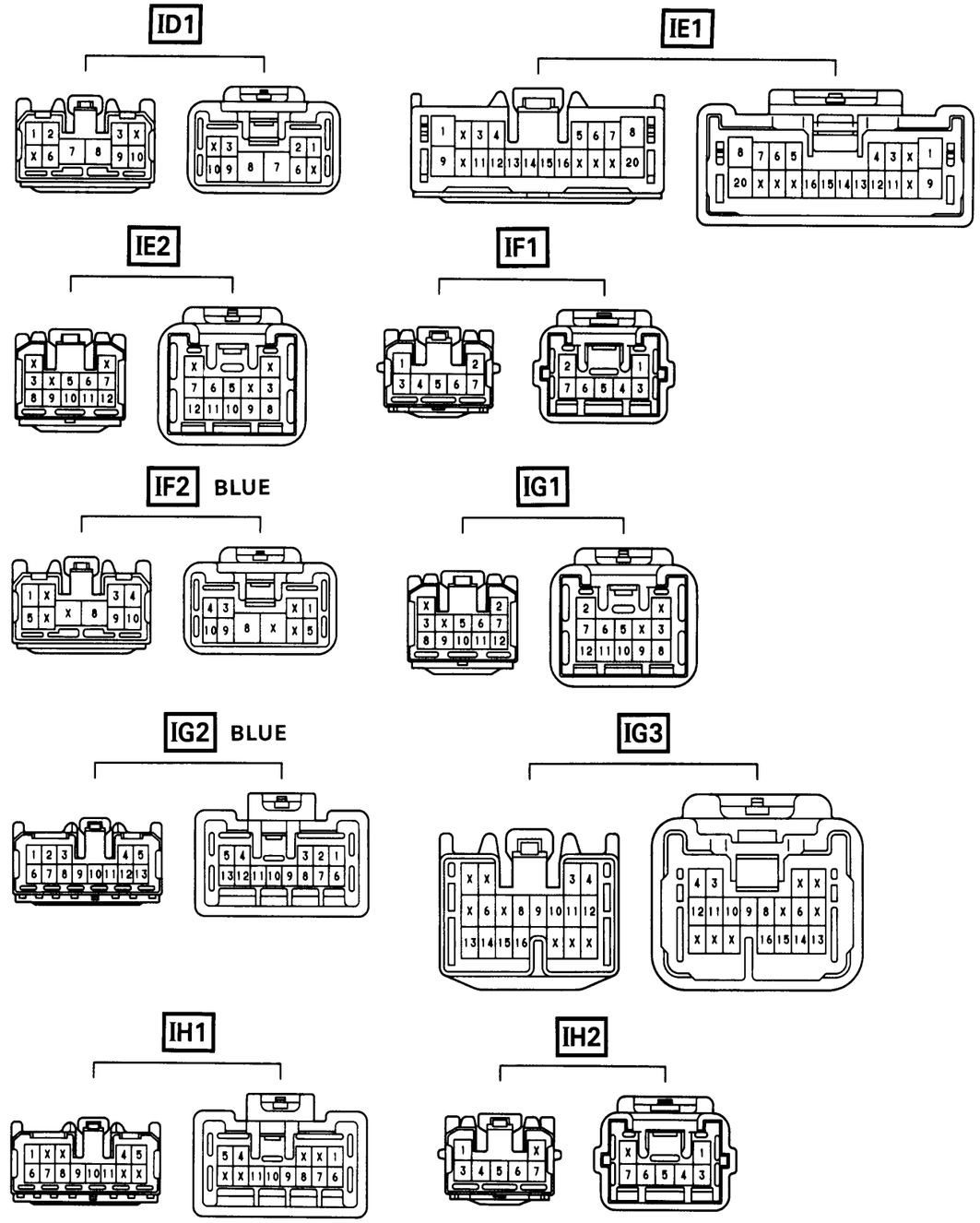

CODE	JOINING WIRE HARNESS AND WIRE HARNESS (CONNECTOR LOCATION)
ID1	FLOOR WIRE AND COWL WIRE (LEFT KICK PANEL)
IE1	FRONT DOOR LH WIRE AND INSTRUMENT PANEL WIRE (LEFT KICK PANEL)
IE2	
IF1	FLOOR WIRE AND INSTRUMENT PANEL WIRE (LEFT KICK PANEL)
IF2	
IG1	INSTRUMENT PANEL WIRE AND COWL WIRE (LOWER FINISH PANEL)
IG2	
IG3	INSTRUMENT PANEL WIRE AND COWL WIRE (UNDER THE BLOWER MOTOR)
IH1	ENGINE ROOM MAIN WIRE AND COWL WIRE (RIGHT KICK PANEL)
IH2	

English

▭: Location of Connector Joining Wire Harness and Wire Harness

[LHD]

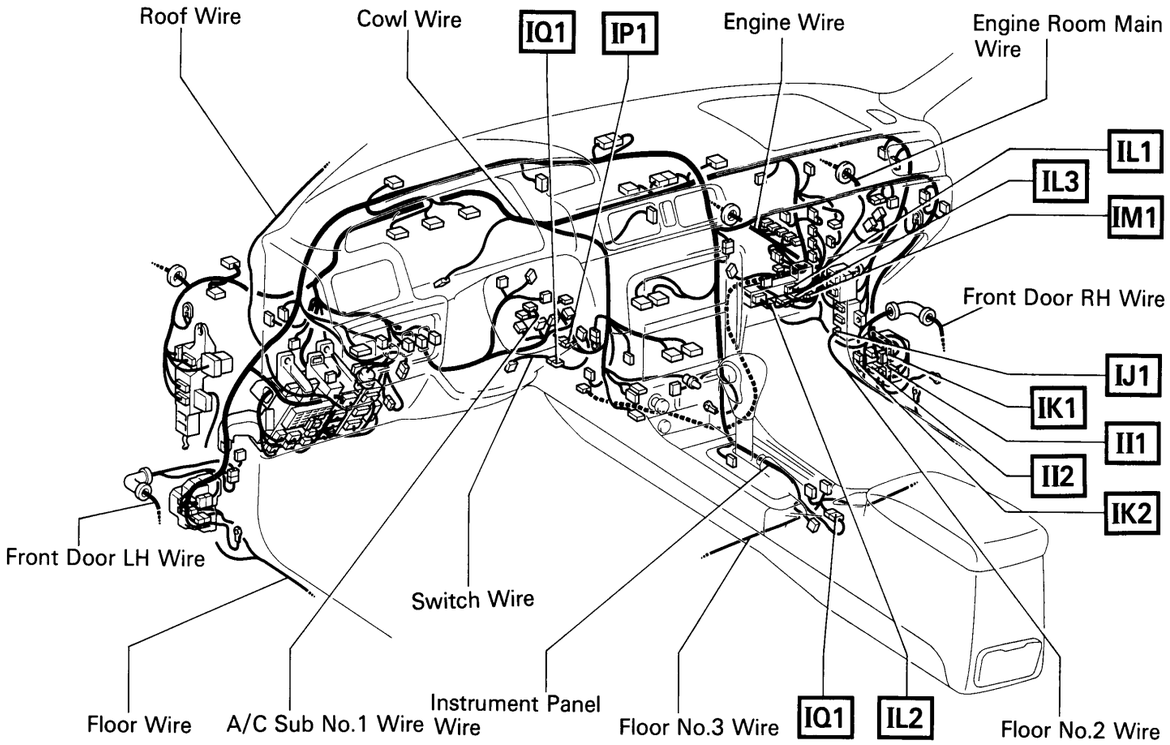

○: Location of Splice Points

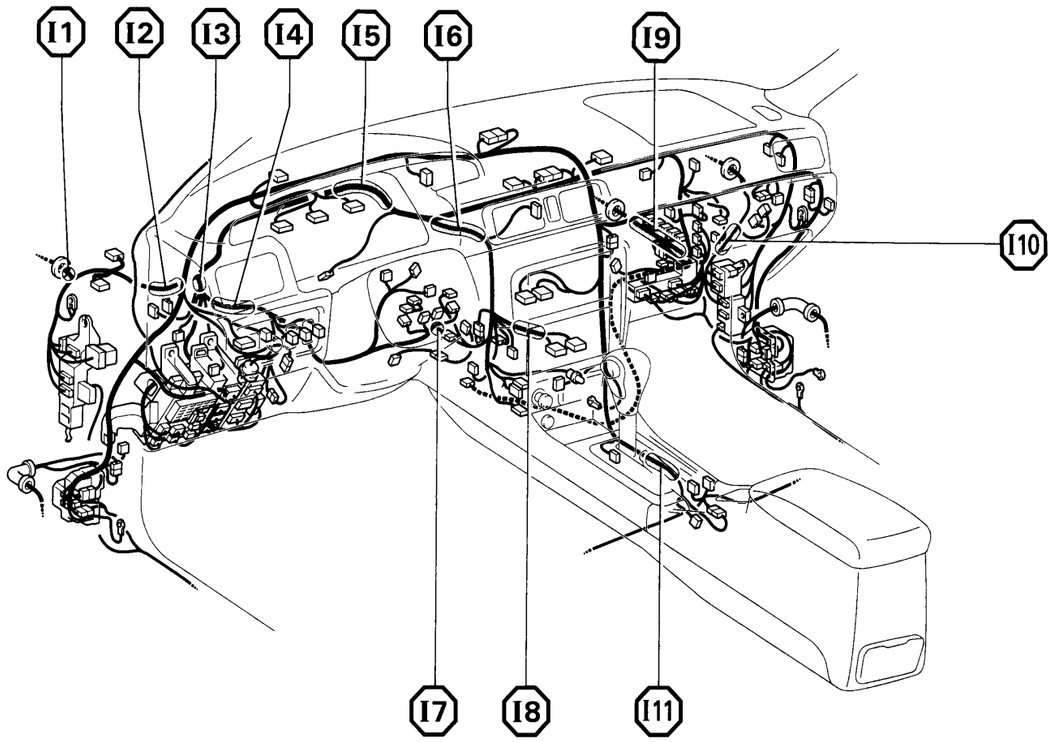

English

Connector Joining Wire Harness and Wire Harness

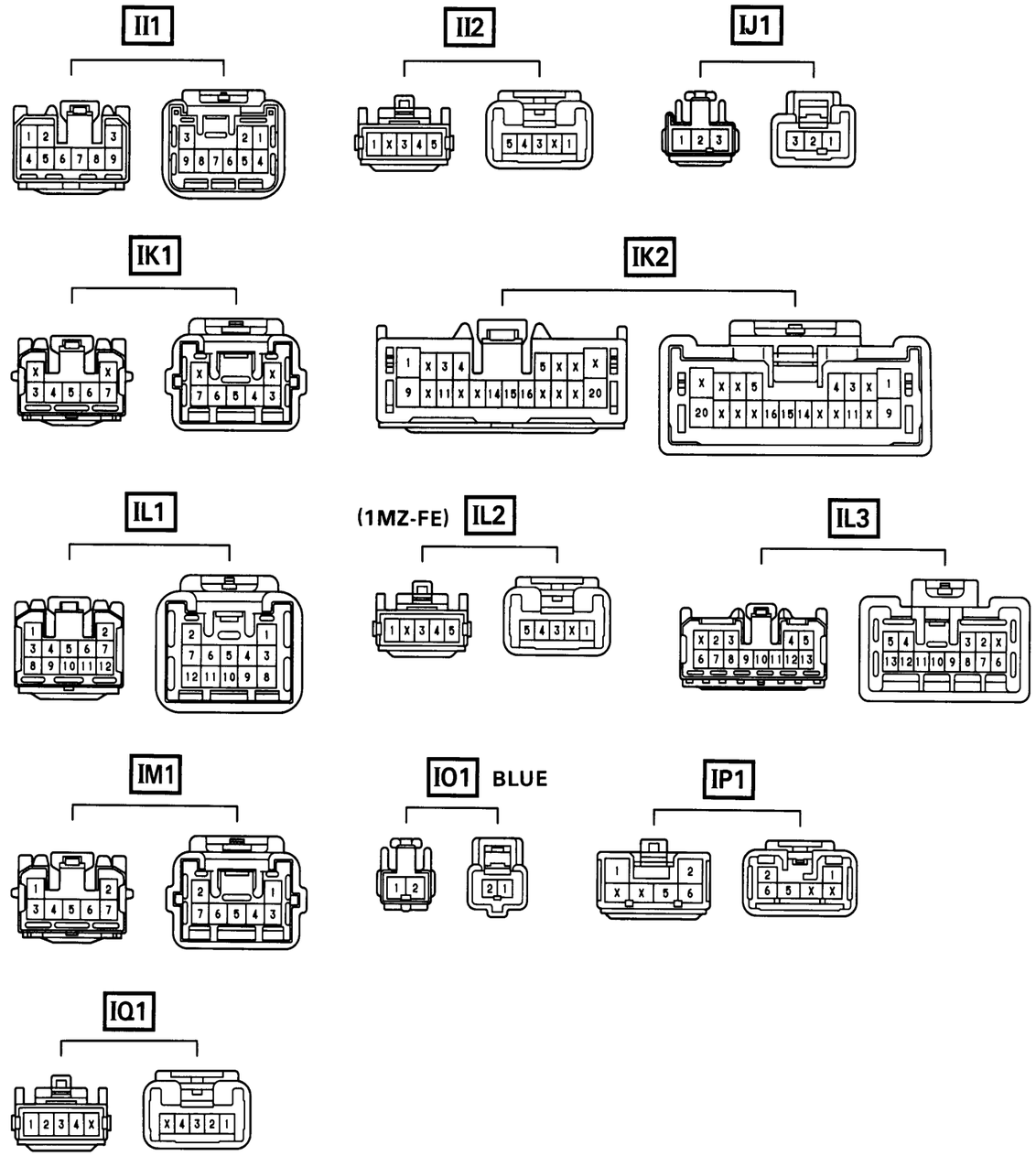

CODE	JOINING WIRE HARNESS AND WIRE HARNESS (CONNECTOR LOCATION)
II1	FLOOR NO.2 WIRE AND INSTRUMENT PANEL WIRE (RIGHT KICK PANEL)
II2	
IJ1	FLOOR NO.2 WIRE AND COWL WIRE (RIGHT KICK PANEL)
IK1	FRONT DOOR RH WIRE AND INSTRUMENT PANEL WIRE (RIGHT KICK PANEL)
IK2	
IL1	ENGINE WIRE AND COWL WIRE (UNDER THE BLOWER MOTOR)
IL2	
IL3	
IM1	ENGINE WIRE AND INSTRUMENT PANEL WIRE (UNDER THE BLOWER MOTOR)
IO1	COWL WIRE AND SWITCH WIRE (INSTRUMENT PANEL BRACE LH)
IP1	COWL WIRE AND A/C SUB NO.1 WIRE (INSTRUMENT PANEL BRACE LH)
IQ1	FLOOR NO.3 WIRE AND INSTRUMENT PANEL WIRE (UNDER THE CONSOLE BOX)

▭: Location of Connector Joining Wire Harness and Wire Harness
▽: Location of Ground Points

[LHD]

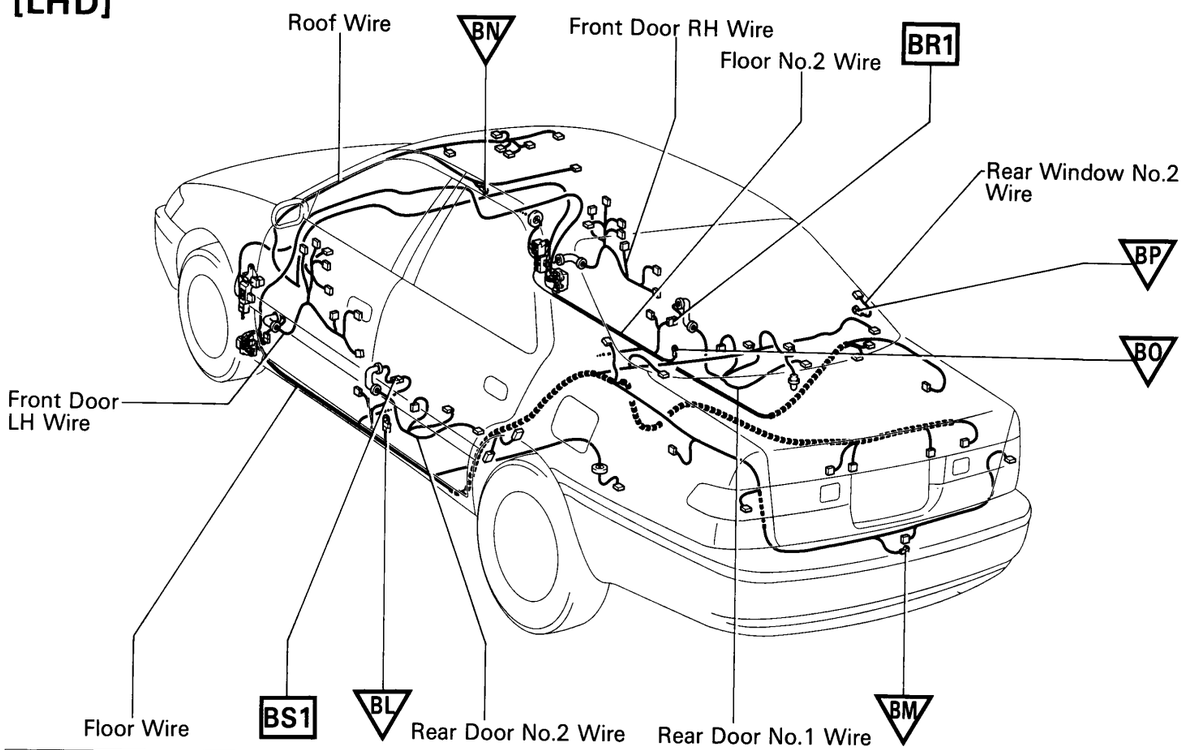

○: Location of Splice Points

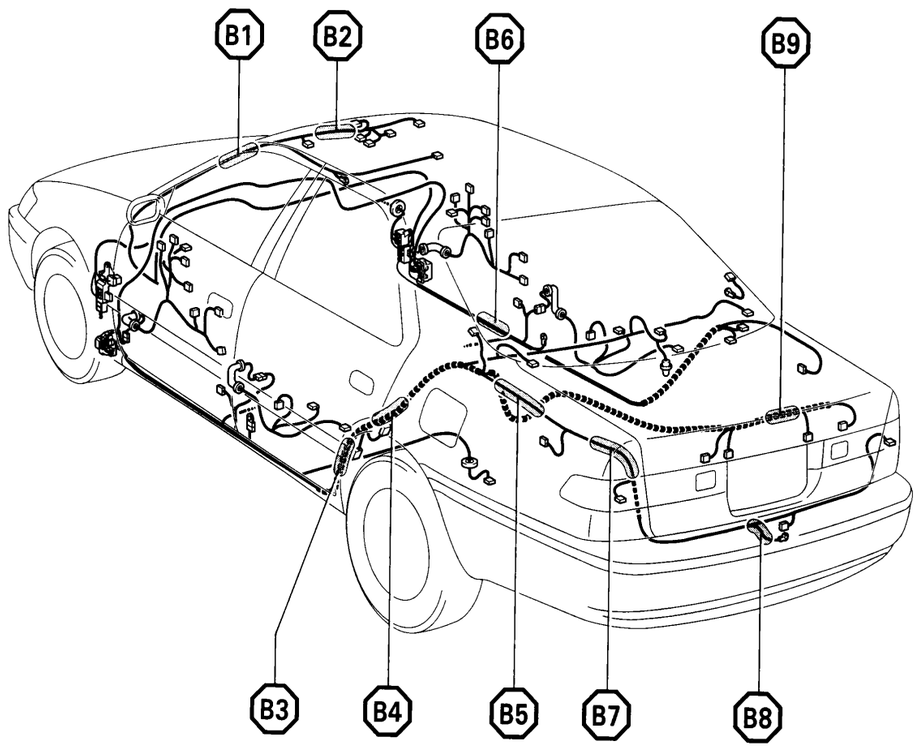

Connector Joining Wire Harness and Wire Harness

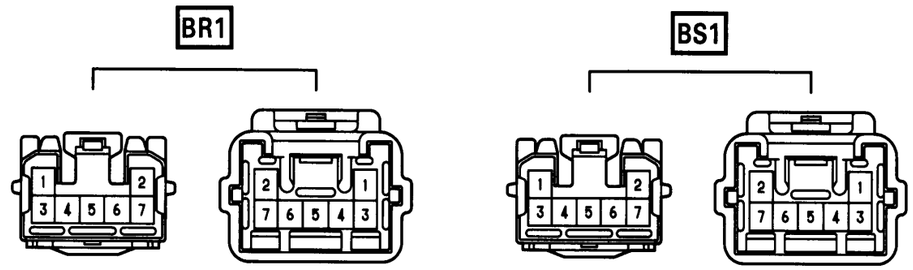

CODE	JOINING WIRE HARNESS AND WIRE HARNESS (CONNECTOR LOCATION)
BR1	REAR DOOR NO.1 WIRE AND FLOOR NO.2 WIRE (UNDER THE RIGHT CENTER PILLAR)
BS1	REAR DOOR NO.2 WIRE AND FLOOR WIRE (UNDER THE LEFT CENTER PILLAR)

G ELECTRICAL WIRING ROUTING

▭ : Location of Connector Joining Wire Harness and Wire Harness
⬡ : Location of Splice Points

[LHD]

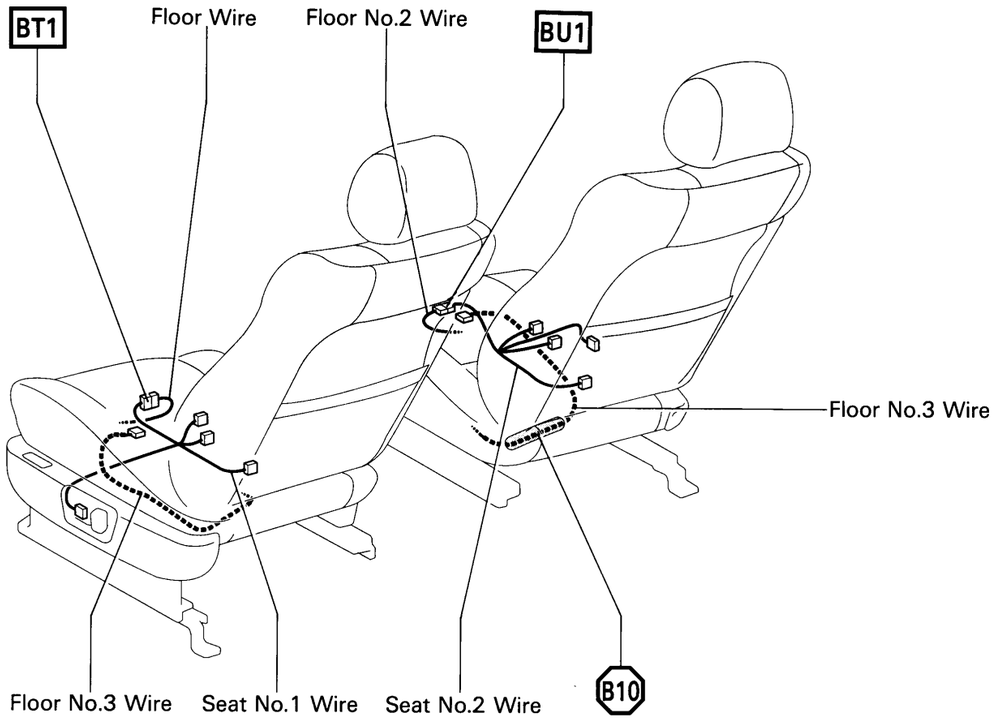

▭ : Location of Connector Joining Wire Harness and Wire Harness

[RHD]

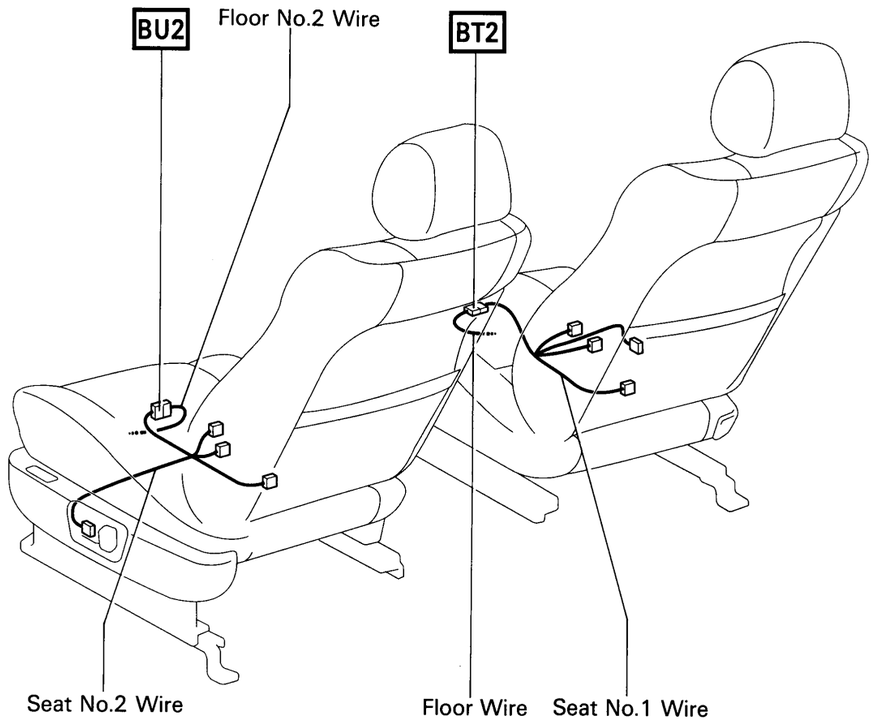

Connector Joining Wire Harness and Wire Harness

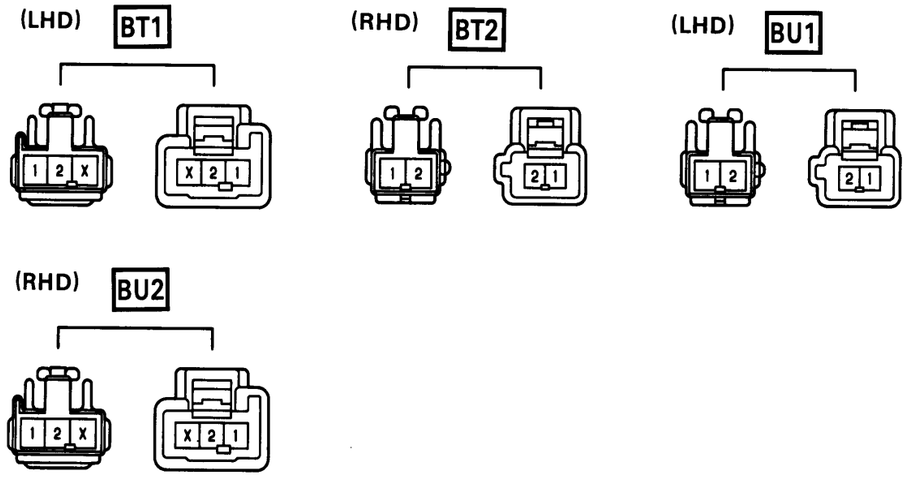

CODE	JOINING WIRE HARNESS AND WIRE HARNESS (CONNECTOR LOCATION)
BT1	FLOOR WIRE AND SEAT NO.1 WIRE (UNDER THE DRIVER'S SEAT)
BT2	
BU1	FLOOR NO.2 WIRE AND SEAT NO.2 WIRE (UNDER THE PASSENGER'S SEAT)
BU2	

H POWER SOURCE (Current Flow Chart)

The chart below shows the route by which current flows from the battery to each electrical source (Fusible Link, Circuit Breaker, Fuse, etc.) and other parts.
The next page and following pages show the parts to which each electrical source outputs current.

Le schéma ci-après indique l'acheminement à travers lequel s'écoule le courant de la batteri à chaque source électrique (lames fusibles, disjoncteurs, fusibles, etc.) et autres pièces.
La page suivante ainsi que celles qui suivent indiquent les piéces auxquelles chaque source électrique produit du courant.

En el siguiente cuadro aparece la ruta que recorre la corriente desde la bateria hasta cada fuente de alimentación (eslabón fusible, fusible, ruptor, etc.) y otras piezas.
Las siguientes páginas indican las partes que reciben alimentación.

*1 : LHD *4 : 5S-FE
*2 : RHD *5 : w/ Daytime Running Light
*3 : 1MZ-FE *6 : w/o Daytime Running Light

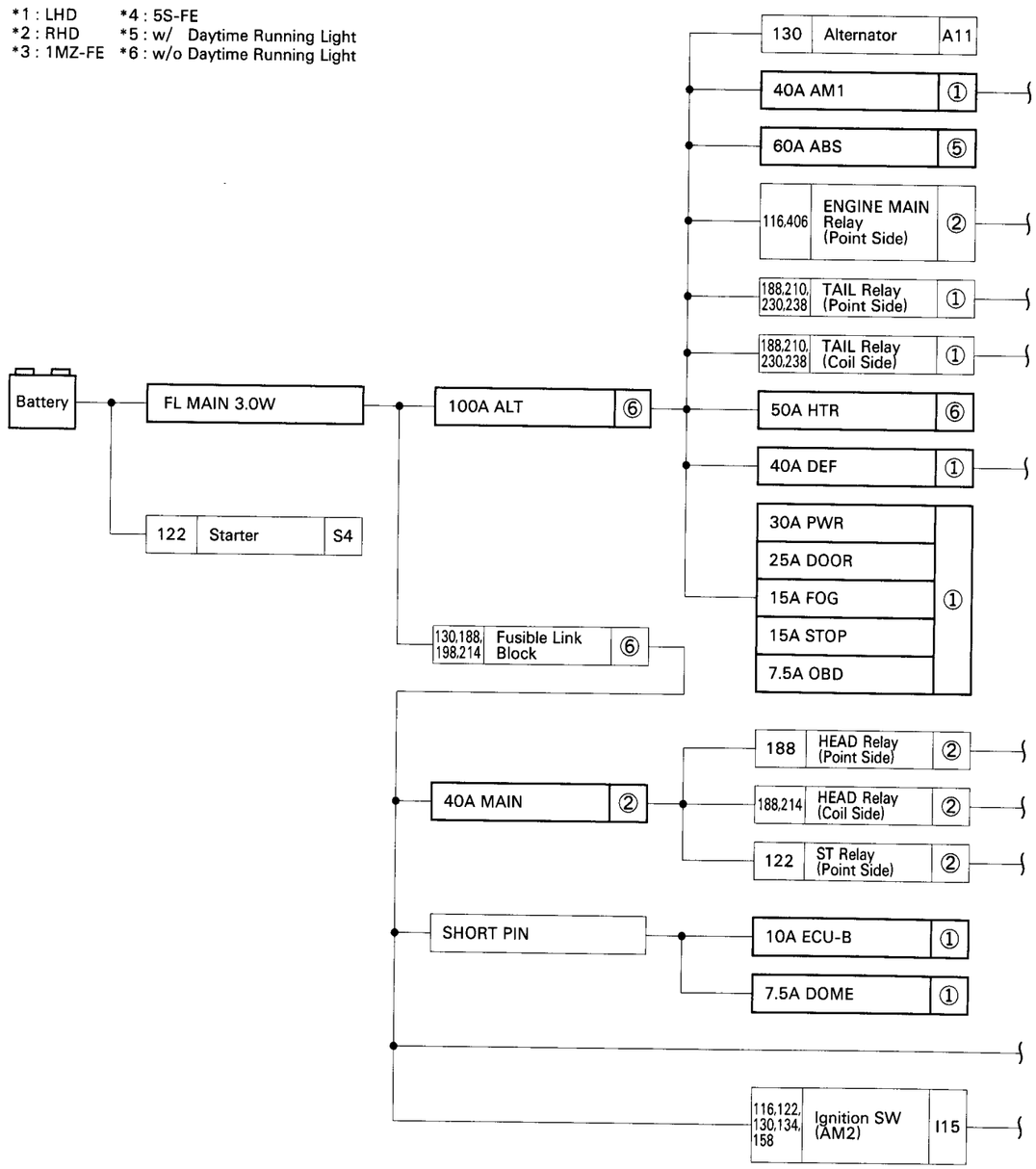

[LOCATION] ①:Instrument Panel J/B (See page 52 (LHD) or 54 (RHD))
⑤:Engine Room R/B No.3 (See page 59)
②:Engine Room J/B No.2 (See page 56)
⑥:Fusible Link Block (See page 58)

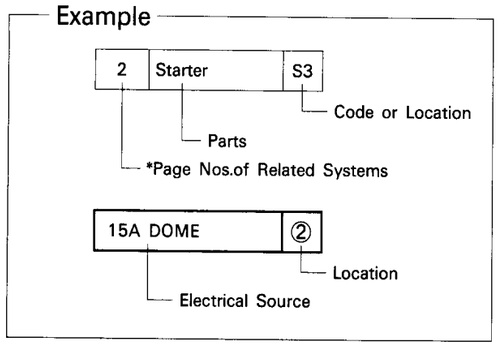

* These are the page numbers of the first page on which the related system is shown.
The part indicated is located somewhere in the system, not necessarily on the page indicated here.

* *Numéros de page de la première page sur laquelle le système afférent est représenté.*
L'organe indiqué se trouve quelque part à l'intérieur du système, mais non pas necessairement dans la page qui est mentionnée ici.

* *Estos son los números de página de la primera página en la que se muestra el sistema relacionado.*
La parte indicada está situada en algun sition del sistema, y no necesariamente en la página aqui indicada.

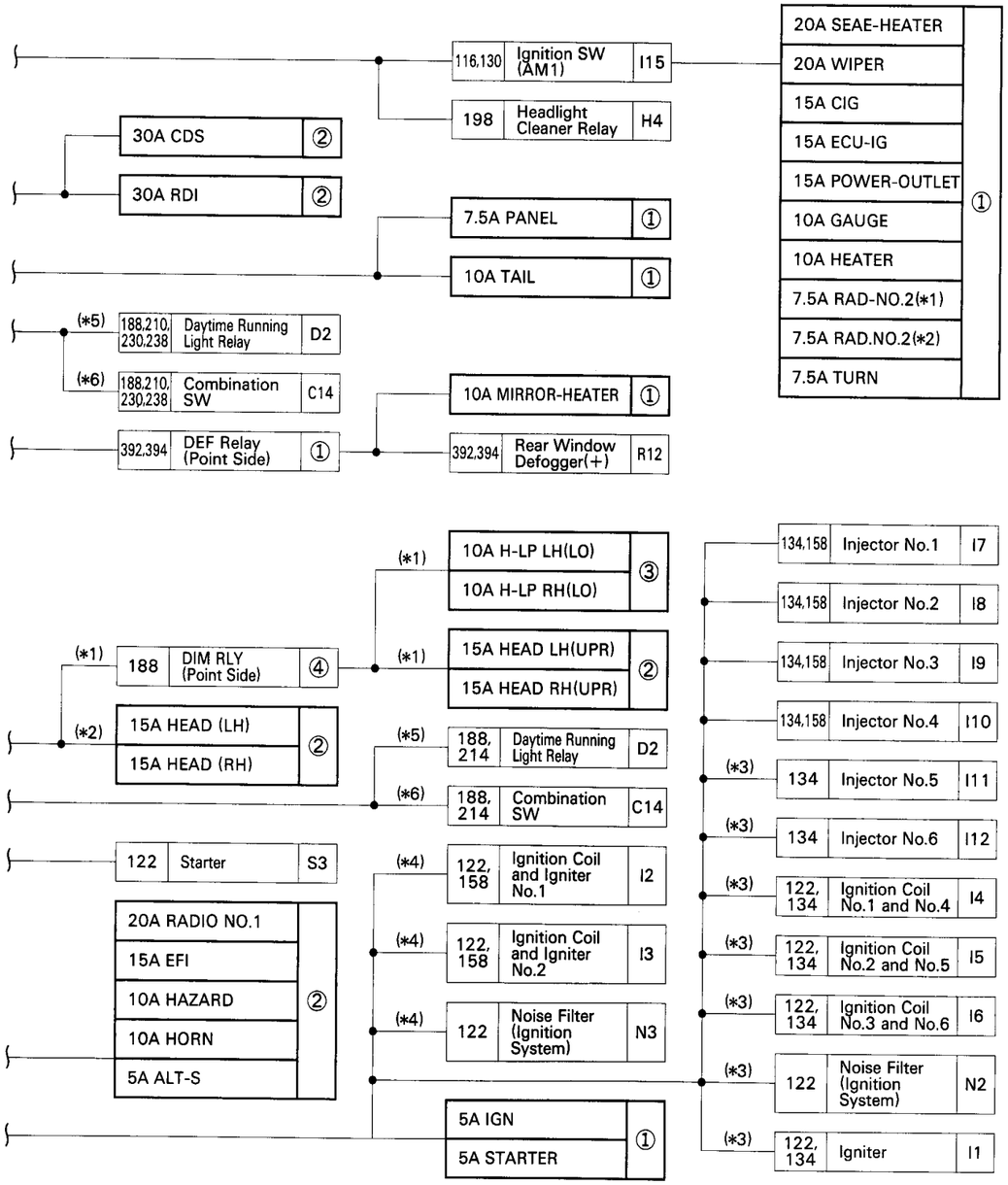

③:Engine Room R/B No.1 (See page 58)
④:Engine Room R/B No.2 (See page 59)

H POWER SOURCE (Current Flow Chart)

*1 : LHD
*2 : RHD

Location	CB or Fuse	*Page Nos. of Related Systems	A/C Condenser Fan Motor	A/C Magnetic Clutch and Lock Sensor	A/C Triple Pressure SW (A/C Dual and Single Pressure SW)	ABS Actuator	Air Flow Meter	Alternator	A/C Blower Motor Linear Controller	A/C ECU	A/C ECU	ABS ECU	ABS ECU	Air Vent Mode Control Servo Motor	Airbag Sensor Assembly	Ashtray Illumination	Auto Antenna Relay and Motor	Back-Up Light SW	Brake Fluid Level Warning SW	Blower Motor	Blower Resistor	Back-Up Light	Check Connector	Cigarette Lighter
			406	406	406	382	134	130	414	230 392 394	406	382	382	414	321	230	334	260	396	414	414	260	134 158 382	264
			A2	A3	A4	A6	A9	A10	A12	A13	A14	A18	A19	A22	A23	A26	A29	B1	B2	B3	B4	B5	C2	C6
	40A	DEF																						
	30A	PWR																						
	25A	DOOR																						
	20A	SEAT-HEATER(*1)																						
	20A	WIPER																						
	15A	CIG													●									●
	15A	ECU-IG			●					●		●	●				●							
	15A	FOG																						
	15A	POWER-OUTLET																						
	15A	STOP										●	●											
①	10A	GAUGE						●					●					●	●			●	●	
	10A	HEATER		●						●	●			●										
	10A	MIRROR-HEATER																						
	10A	TAIL																						
	7.5A	OBD																						
	7.5A	PANEL								●						●								
	7.5A	RAD-NO.2(*1)															●							
	7.5A	RAD.NO.2(*2)															●							
	7.5A	TURN																						
	5A	IGN						●							●									
	5A	STARTER																						
	30A	CDS	●																					
	30A	RDI																						
	20A	RADIO NO.1															●							
	15A	EFI					●																	●
	15A	HEAD LH (UPR)(*1)																						
	15A	HEAD RH (UPR)(*1)																						
②	15A	HEAD (LH)(*2)																						
	15A	HEAD (RH)(*2)																						
	10A	ECU-B									●													
	10A	HAZARD																						
	10A	HORN																						
	7.5A	DOME																						
	5A	ALT-S						●																
④	10A	H-LP LH(LO)(*1)																						
	10A	H-LP RH(LO)(*2)																						
⑤	60A	ABS				●																		
⑥	50A	HTR							●	●										●	●			

* These are the page numbers of the first page on which the related system is shown.
The part indicated is located somewhere in the system, not necessarily on the page indicated here.

Location	CB or Fuse	*Page Nos. of Related Systems	Cigarette Lighter Illumination	Clock	Charge Warning Light [Comb. Meter]	Combination Meter	Combination Meter	Open Door Warning Light [Comb. Meter]	High Beam Indicator Light [Comb. Meter]	SRS Warning Light [Comb. Meter]	Turn Signal Indicator Light [Comb. Meter]	ABS Warning Light [Comb. Meter]	Combination Meter	Combination Meter Illumination [Comb. Meter]	Rear Light Warning Light [Comb. Meter]	Turn Signal Warning Light [Comb. Meter]	Combination SW	Combination SW	Combination SW	Cruise Control Clutch SW	Cruise Control ECU	Diode (A/C)	Daytime Running Light Relay	Diode (Dome)	Diode (Idle-Up)	Diode (Interior Light)	DLC3	Engine Oil Level Sensor	Engine and ECT ECU	Engine and ECT ECU
			230	264	130	354 370 396	396	246	188	321	222	382	134,158 254,338 354,370 396	230	238	222	270	272	188 210	338	338	406	188 214 264 396	246	158	246	134	396	122 134	134
			C7	C8	C9		C10					C11					C12	C13	C14	C15	C16	D1	D2	D3	D6	D7	D18	E5	E6	E8
	40A	DEF																												
	30A	PWR																												
	25A	DOOR																												
	20A	SEAT-HEATER(*1)																												
	20A	WIPER																●												
	15A	CIG		●																										
	15A	ECU-IG																			●	●								
	15A	FOG																												
	15A	POWER-OUTLET																												
	15A	STOP				●															●									●
①	10A	GAUGE										●	●		●					●	●		●							
	10A	HEATER																				●								
	10A	MIRROR-HEATER																							●					
	10A	TAIL																	●						●					●
	7.5A	OBD	●	●																			●				●			
	7.5A	PANEL												●																
	7.5A	RAD-NO.2(*1)																												
	7.5A	RAD.NO.2(*2)																												
	7.5A	TURN			●						●					●			●											
	5A	IGN																												
	5A	STARTER																										●		
	30A	CDS																												
	30A	RDI																												
	20A	RADIO NO.1																												
	15A	EFI																										●	●	●
	15A	HEAD LH (UPR)(*1)																												
	15A	HEAD RH (UPR)(*1)							●																					
②	15A	HEAD (LH)(*2)							●										●											
	15A	HEAD (RH)(*2)							●										●											
	10A	ECU-B					●			●																				
	10A	HAZARD									●				●				●											
	10A	HORN														●														
	7.5A	DOME					●	●															●	●		●				
	5A	ALT-S																												
④	10A	H-LP LH(LO)(*1)																												
	10A	H-LP RH(LO)(*2)																												
⑤	60A	ABS																												
⑥	50A	HTR																												

[LOCATION] ①:Instrument Panel J/B (See page 52 (LHD) or 54 (RHD))
②:Engine Room J/B No.2 (See page 56)
③:Engine Room R/B No.1 (See page 58)
④:Engine Room R/B No.2 (See page 59)
⑤:Engine Room R/B No.3 (See page 59)
⑥:Fusible Link Block (See page 58)

H POWER SOURCE (Current Flow Chart)

*1 : LHD
*2 : RHD

Location	CB or Fuse		Engine and ECT ECU	Engine ECU (M/T), Engine and ECT ECU (A/T)	Front Clearance Light LH	Front Clearance Light RH	Front Fog Light LH	Front Fog Light RH	Front Side Turn Signal Light LH	Front Side Turn Signal Light RH	Front Turn Signal Light LH	Front Turn Signal Light RH	Front Wiper Motor	Front Fog Light Relay	Fuel Pump and Sender	Glove Box Light SW	Headlight Beam Level Control Actuator LH	Headlight Beam Level Control Actuator RH	Headlight Cleaner Relay	Headlight LH	Headlight RH	Heated Oxygen Sensor	Heated Oxygen Sensor (Bank 1 Sensor 1)
	*Page Nos. of Related Systems		134 354	122,158 370	238	238	210	210	222	222	222	222	272	210	134 158 396	230	206	206	198	188	188	158	134
	Code or Location		E9	E12	F1	F2	F3	F4	F5	F6	F7	F8	F9	F16	F19	G1	H1	H2	H4	H5	H6	H7	H8
①	40A	DEF																					
①	30A	PWR																					
①	25A	DOOR																					
①	20A	SEAT-HEATER(*1)																					
①	20A	WIPER											●						●				
①	15A	CIG																					
①	15A	ECU-IG																					
①	15A	FOG					●	●						●									
①	15A	POWER-OUTLET																					
①	15A	STOP	●	●																			
①	10A	GAUGE													●								
①	10A	HEATER																					
①	10A	MIRROR-HEATER		●																			
①	10A	TAIL	●	●	●	●								●									
①	7.5A	OBD																					
①	7.5A	PANEL														●							
①	7.5A	RAD-NO.2(*1)																					
①	7.5A	RAD.NO.2(*2)																					
①	7.5A	TURN							●	●	●	●											
①	5A	IGN																					
①	5A	STARTER		●																			
②	30A	CDS																					
②	30A	RDI																					
②	20A	RADIO NO.1																					
②	15A	EFI	●	●											●							●	●
②	15A	HEAD LH (UPR)(*1)																		●			
②	15A	HEAD RH (UPR)(*1)																			●		
②	15A	HEAD (LH)(*2)																		●			
②	15A	HEAD (RH)(*2)															●	●			●		
②	10A	ECU-B							●	●	●	●											
②	10A	HAZARD																					
②	10A	HORN																					
②	7.5A	DOME																					
②	5A	ALT-S																					
④	10A	H-LP LH(LO)(*1)																		●			
④	10A	H-LP RH(LO)(*2)															●	●			●		
⑤	60A	ABS																					
⑥	50A	HTR																					

Location	CB or Fuse		Heated Oxygen Sensor (Bank 2 Sensor 1)	Horn (High)	Horn (Low)	Hazard SW	Headlight Beam Level Control SW	Headlight Cleaner SW	High Mounted Stop Light	ISC Valve	Integration Relay	Interior Light	License Plate Light LH	License Plate Light RH	Light Failure Sensor	Luggage Compartment Light	Luggage Compartment Light SW	Moon Roof Control SW and Control Relay	Moon Roof Motor and Limit SW	Neutral Start SW, A/T Indicator Light SW and Back-Up Light SW	Oil Pressure SW	A/T Shift Lever Illumination	O/D Main SW	Parking Brake SW	Power Outlet	Personal Light	Personal Light	Power Window Control Relay and Motor	Power Window Control SW (Front Passenger's Side)	Power Window Control SW Rear LH
	*Page Nos. of Related Systems		134	270	270	222 230	206 230	230	254	138 158	246 282 298 304	246	238	238	238 254	246	246	298	298	122,134 158,260 338,354 370	396	230	354 370 396	396	268	246	246	304	304	304
	Code or Location		H9	H10	H11	H12	H13	H14	H15	I14	I16	I17	L1	L2	L3	L4	L5	M1	M2	N1	O1	O2		P2	P3	P4	P5	P6	P7	P8
①	40A	DEF																												
①	30A	PWR																												
①	25A	DOOR																												
①	20A	SEAT-HEATER(*1)																●	●									●	●	●
①	20A	WIPER									●																			
①	15A	CIG																												
①	15A	ECU-IG																												
①	15A	FOG																												
①	15A	POWER-OUTLET																												
①	15A	STOP																												
①	10A	GAUGE																							●					
①	10A	HEATER							●						●															
①	10A	MIRROR-HEATER									●				●					●	●		●					●		
①	10A	TAIL																												
①	7.5A	OBD											●	●	●															
①	7.5A	PANEL																												
①	7.5A	RAD-NO.2(*1)				●	●	●														●								
①	7.5A	RAD.NO.2(*2)																												
①	7.5A	TURN																												
①	5A	IGN				●																								
①	5A	STARTER																												
②	30A	CDS																		●										
②	30A	RDI																												
②	20A	RADIO NO.1																												
②	15A	EFI																												
②	15A	HEAD LH (UPR)(*1)	●							●																				
②	15A	HEAD RH (UPR)(*1)																												
②	15A	HEAD (LH)(*2)																												
②	15A	HEAD (RH)(*2)																												
②	10A	ECU-B					●																							
②	10A	HAZARD				●																								
②	10A	HORN																												
②	7.5A	DOME		●	●																									
②	5A	ALT-S									●	●				●	●									●	●			
④	10A	H-LP LH(LO)(*1)																												
④	10A	H-LP RH(LO)(*2)						●																						
⑤	60A	ABS																												
⑥	50A	HTR																												

* These are the page numbers of the first page on which the related system is shown.
The part indicated is located somewhere in the system, not necessarily on the page indicated here.

[LOCATION] ①:Instrument Panel J/B (See page 52 (LHD) or 54 (RHD))
②:Engine Room J/B No.2 (See page 56)
③:Engine Room R/B No.1 (See page 58)
④:Engine Room R/B No.2 (See page 59)
⑤:Engine Room R/B No.3 (See page 59)
⑥:Fusible Link Block (See page 58)

H POWER SOURCE (Current Flow Chart)

*1 : LHD
*2 : RHD

English

Location	CB or Fuse		Power Window Control SW Rear RH	Power Window Master SW	Power Window Motor (Front Passenger's Side)	Power Window Motor Rear LH	Power Window Motor Rear RH	Power Seat Control SW (Driver's Seat)	Power Seat Control SW (Front Passenger's Seat)	Power Seat Motor (Driver's Seat Reclining Control)	Power Seat Motor (Driver's Seat Slide Control)	Power Seat Motor (Driver's Seat Vertical Control)	Power Seat Motor (Front Passenger's Seat Reclining Control)	Power Seat Motor (Front Passenger's Seat Slide Control)	Power Seat Motor (Front Passenger's Seat Vertical Control)	Radiator Fan Motor	Radio and Player	Rear Fog Light SW	Remote Control Mirror SW	Rheostat	Rear Turn Signal Light LH [Rear Comb. Light LH]	Stop Light LH [Rear Comb. Light LH]	Taillight LH [Rear Comb. Light LH]	Rear Turn Signal Light RH [Rear Comb. Light RH]
	*Page Nos. of Related Systems		304	304	304	304	304	312	312	312	312	312	312	312	312	406	230 330 334	230	278	214 230 396	222	254	238	222
	Parts / Code or Location		P9	P10	P11	P12	P13	P14	P15	P16	P17	P18	P19	P20	P21	R1	R2	R4	R5	R6	R7			R8
①	40A	DEF																						
①	30A	PWR	●	●	●	●	●	●	●	●	●	●	●	●	●									
①	25A	DOOR																						
①	20A	SEAT-HEATER(*1)																						
①	20A	WIPER																						
①	15A	CIG																	●					
①	15A	ECU-IG																						
①	15A	FOG																						
①	15A	POWER-OUTLET																						
①	15A	STOP																				●		
①	10A	GAUGE																						
①	10A	HEATER																						
①	10A	MIRROR-HEATER																						
①	10A	TAIL																					●	
①	7.5A	OBD																						
①	7.5A	PANEL															●	●		●				
①	7.5A	RAD-NO.2(*1)															●							
①	7.5A	RAD.NO.2(*2)															●							
①	7.5A	TURN																			●			●
①	5A	IGN																						
①	5A	STARTER																						
②	30A	CDS														●								
②	30A	RDI														●								
②	20A	RADIO NO.1																						
②	15A	EFI																						
②	15A	HEAD LH (UPR)(*1)																						
②	15A	HEAD RH (UPR)(*1)																						
②	15A	HEAD (LH)(*2)																						
②	15A	HEAD (RH)(*2)																						
②	10A	ECU-B																●						
②	10A	HAZARD																					●	
②	10A	HORN																						
②	7.5A	DOME																						
②	5A	ALT-S																						
④	10A	H-LP LH(LO)(*1)																						
④	10A	H-LP RH(LO)(*2)																						
⑤	60A	ABS																						
⑥	50A	HTR																						

* These are the page numbers of the first page on which the related system is shown.
The part indicated is located somewhere in the system, not necessarily on the page indicated here.

[LOCATION] ①:Instrument Panel J/B (See page 52 (LHD) or 54 (RHD))
②:Engine Room J/B No.2 (See page 56)
③:Engine Room R/B No.1 (See page 58)
④:Engine Room R/B No.2 (See page 59)
⑤:Engine Room R/B No.3 (See page 59)
⑥:Fusible Link Block (See page 58)

		Stop Light RH [Rear Comb. Light RH]	Taillight RH [Rear Comb. Light RH]	Remote Control Mirror LH	Remote Control Mirror RH	Speed Sensor (Combination Meter)	Seat Heater SW (Driver's Seat)	Seat Heater SW (Front Passenger's Seat)	Stop Light SW	Seat Heater (Driver's Seat)	Seat Heater (Front Passenger's Seat)	Transponder Key Computer	Turn Signal Flasher	VSV (ACIS)	VSV (EGR)	Vanity Light LH	Vanity Light RH	Washer Motor	Water Temp. Sender	Water Temp. SW No.1	Water Temp. SW No.2	DEF Relay (Coil Side)	DEF Relay (Point Side)	Integration Relay	PWR Relay (Point Side)	EFI Relay (Coil Side)	EFI Relay (Point Side)	FAN NO.1 Relay (Coil Side)
	*Page Nos. of Related Systems	254	238	278 392	278 392	134,158 338,354 370	230 318	230 318	134,158 254,338 354,370 382	318	318	182	222	134	134 158	246	246	272	396	406	406	392 394	392 394	202 294	304	134 158 354 370	134 158 354 370	406
	Parts / Code or Location	R8		R14	R15	S1	S5	S6	S7	S8	S9	T4	T5	V3	V4	V5	V6	W1	W2	W3	W4	①				②		
①	40A	DEF			●	●																●						
①	30A	PWR																							●			
①	25A	DOOR																										
①	20A	SEAT-HEATER(*1)					●	●		●	●																	
①	20A	WIPER																●										
①	15A	CIG			●	●																		●				
①	15A	ECU-IG																		●	●							
①	15A	FOG																										
①	15A	POWER-OUTLET																										
①	15A	STOP	●						●																			
①	10A	GAUGE				●													●					●				
①	10A	HEATER																					●					
①	10A	MIRROR-HEATER																										
①	10A	TAIL		●																				●				
①	7.5A	OBD																										
①	7.5A	PANEL																										
①	7.5A	RAD-NO.2(*1)																										
①	7.5A	RAD.NO.2(*2)											●															
①	7.5A	TURN										●																
①	5A	IGN																									●	
①	5A	STARTER																										
②	30A	CDS																										
②	30A	RDI																										●
②	20A	RADIO NO.1												●	●											●		
②	15A	EFI																										
②	15A	HEAD LH (UPR)(*1)																										
②	15A	HEAD RH (UPR)(*1)																										
②	15A	HEAD (LH)(*2)										●																
②	15A	HEAD (RH)(*2)																										
②	10A	ECU-B											●															
②	10A	HAZARD	●																									
②	10A	HORN																										
②	7.5A	DOME														●	●							●				
②	5A	ALT-S																										
④	10A	H-LP LH(LO)(*1)																										
④	10A	H-LP RH(LO)(*2)																										
⑤	60A	ABS																										
⑥	50A	HTR																										

English

*1 : LHD
*2 : RHD

English

Location	CB or Fuse		FAN NO.1 Relay (Point Side)	HORN Relay	CIR OPN Relay	FAN NO.2 Relay (Coil Side)	FAN NO.2 Relay (Point Side)	FAN NO.3 Relay (Coil Side)	FAN NO.3 Relay (Point Side)	HTR Relay (Coil Side)	HTR Relay (Point Side)	MG CLT Relay	ABS MOTOR Relay	ABS SOL Relay
		*Page Nos. of Related Systems	406	270	134 158	406	406	406	406	414	414	414	382	382
			②		③					④			⑤	
①	40A	DEF												
①	30A	PWR												
①	25A	DOOR												
①	20A	SEAT-HEATER(*1)												
①	20A	WIPER												
①	15A	CIG												
①	15A	ECU-IG	●				●		●					
①	15A	FOG												
①	15A	POWER-OUTLET												
①	15A	STOP												
①	10A	GAUGE							●					
①	10A	HEATER									●	●		
①	10A	MIRROR-HEATER												
①	10A	TAIL												
①	7.5A	OBD												
①	7.5A	PANEL												
①	7.5A	RAD-NO.2(*1)												
①	7.5A	RAD.NO.2(*2)												
①	7.5A	TURN												
①	5A	IGN												
①	5A	STARTER												
②	30A	CDS				●		●						
②	30A	RDI												
②	20A	RADIO NO.1												
②	15A	EFI			●									
②	15A	HEAD LH (UPR)(*1)												
②	15A	HEAD RH (UPR)(*1)												
②	15A	HEAD (LH)(*2)												
②	15A	HEAD (RH)(*2)												
②	10A	ECU-B												
②	10A	HAZARD												
②	10A	HORN		●										
②	7.5A	DOME												
②	5A	ALT-S												
④	10A	H-LP LH(LO)(*1)												
④	10A	H-LP RH(LO)(*2)												
⑤	60A	ABS											●	●
⑥	50A	HTR								●				

* These are the page numbers of the first page on which the related system is shown.
The part indicated is located somewhere in the system, not necessarily on the page indicated here.

[LOCATION] ①:Instrument Panel J/B (See page 52 (LHD) or 54 (RHD))
②:Engine Room J/B No.2 (See page 56)
③:Engine Room R/B No.1 (See page 58)
④:Engine Room R/B No.2 (See page 59)
⑤:Engine Room R/B No.3 (See page 59)
⑥:Fusible Link Block (See page 58)

CAMRY
ELECTRICAL WIRING DIAGRAM
SYSTEM CIRCUITS

English

	Page
ABS	382
AUTO ANTENNA	334
AUTOMATIC AIR CONDITIONER	414
BACK-UP LIGHT	260
CHARGING	130
CIGARETTE LIGHTER AND CLOCK	264
COMBINATION METER	396
CRUISE CONTROL	338
DOOR LOCK CONTROL	282
ECT AND A/T INDICATOR(1MZ-FE)	354
ECT AND A/T INDICATOR(5S-FE)	370
ENGINE CONTROL (1MZ-FE)	134
ENGINE CONTROL (5S-FE)	158
ENGINE IMMOBILISER SYSTEM	182
FRONT FOG LIGHT	210
FRONT WIPER AND WASHER	272
HEADLIGHT	188
HEADLIGHT BEAM LEVEL CONTROL	206
HEADLIGHT CLEANER	198
HORN	270
ILLUMINATION	230
INTERIOR LIGHT	246
LIGHT REMINDER BUZZER	202
MOON ROOF	298
POWER OUTLET	268
POWER SEAT	312
POWER SOURCE	116
POWER WINDOW	304
RADIATOR FAN AND CONDENSER FAN	406
RADIO AND PLAYER	330
REAR FOG LIGHT	214
REAR WINDOW DEFOGGER	394
REAR WINDOW DEFOGGER AND MIRROR HEATER	392
REMOTE CONTROL MIRROR	278
SEAT HEATER	318
SRS	321
STARTING AND IGNITION	122
STOP LIGHT	254
TAILLIGHT	238
TURN SIGNAL AND HAZARD WARNING LIGHT	222
UNLOCK WARNING	294

POWER SOURCE(LHD)

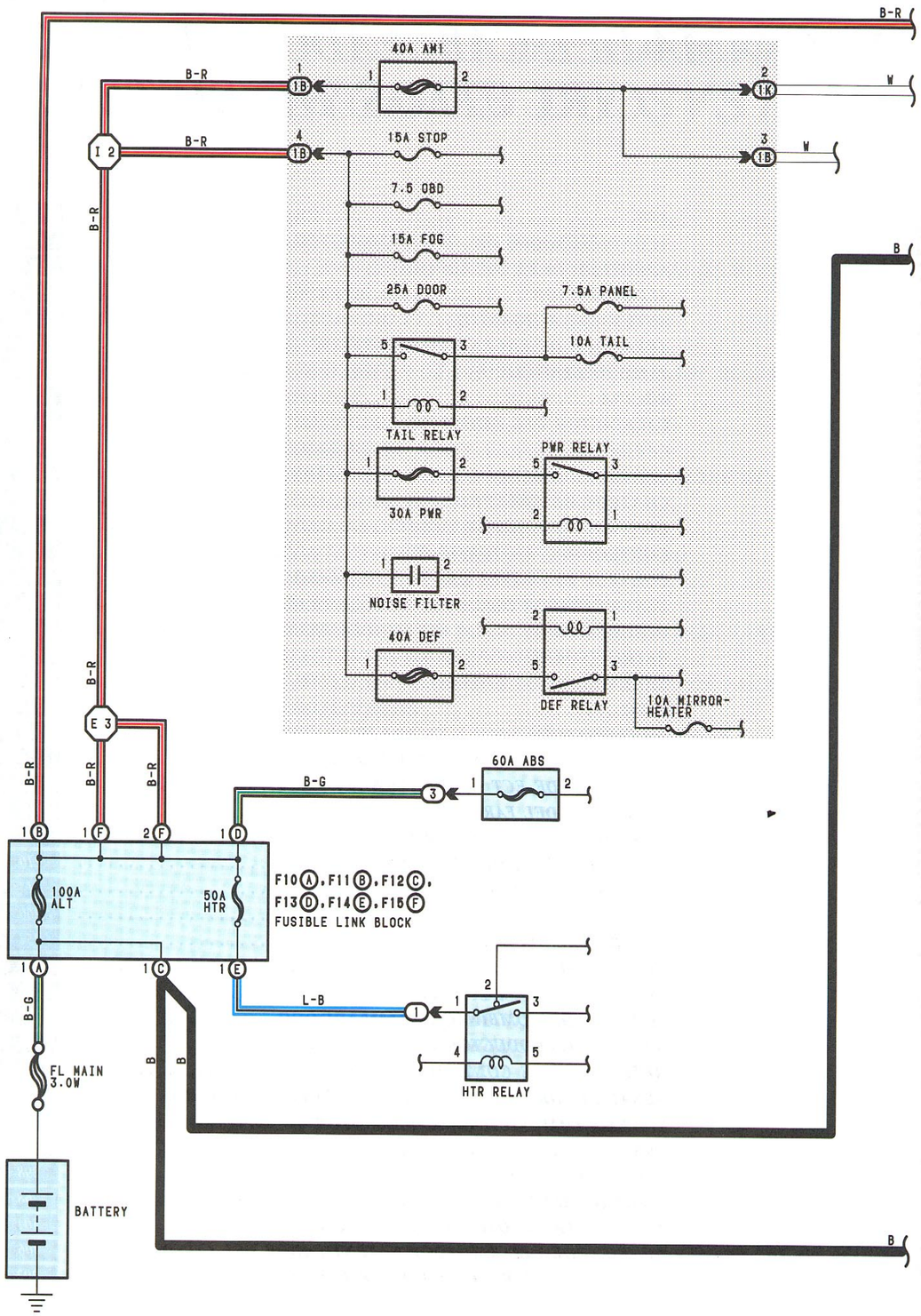

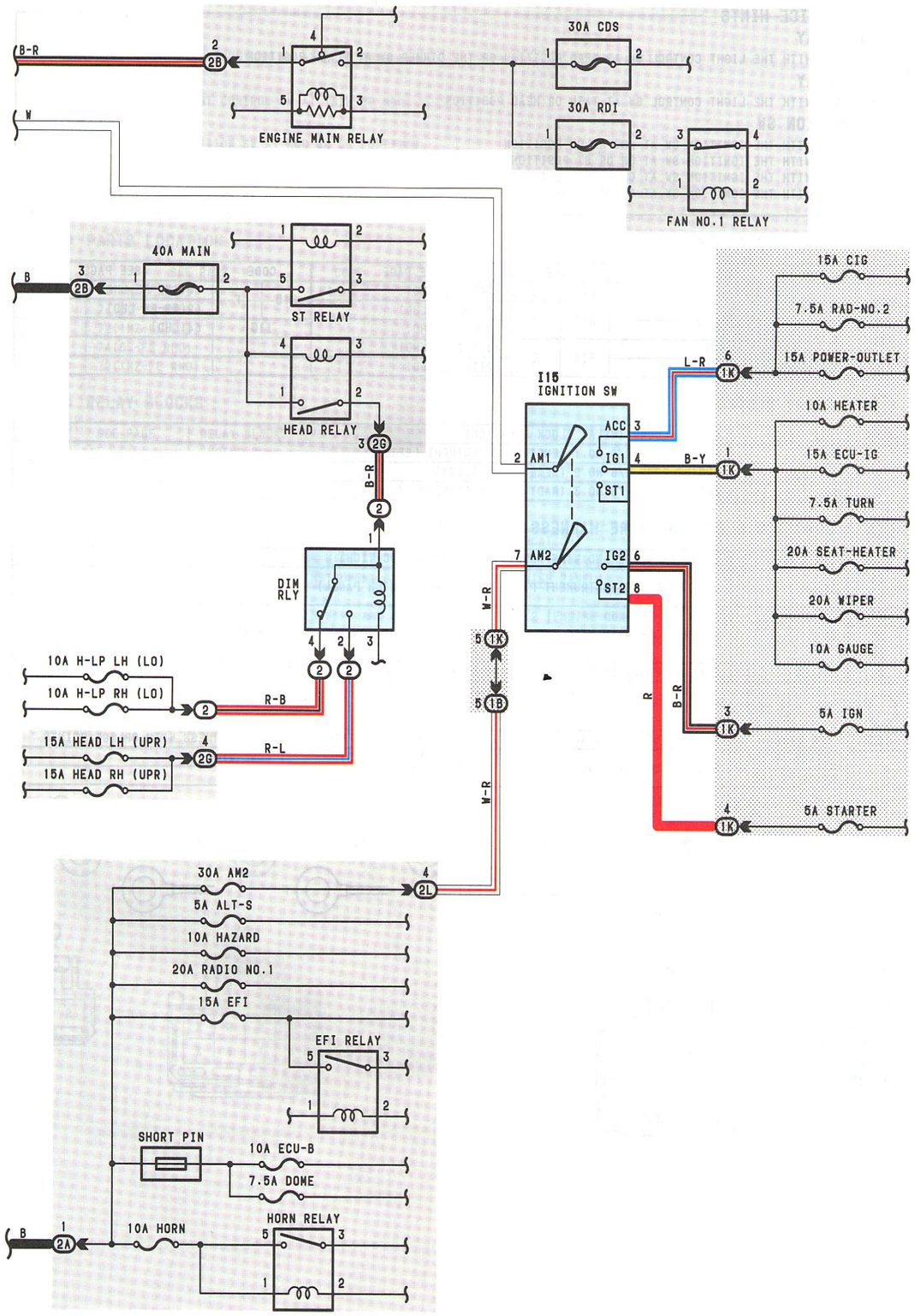

POWER SOURCE(LHD)

SERVICE HINTS

HEAD RELAY

1-2:CLOSED WITH THE LIGHT CONTROL SW AT **HEAD** POSITION OR THE DIMMER SW AT **FLASH** POSITION

TAIL RELAY

5-3:CLOSED WITH THE LIGHT CONTROL SW AT **TAIL** OR **HEAD** POSITION

I15 IGNITION SW

2-3:CLOSED WITH THE IGNITION SW AT **ACC** OR **ON** POSITION
2-4:CLOSED WITH THE IGNITION SW AT **ON** OR **ST** POSITION
7-6:CLOSED WITH THE IGNITION SW AT **ON** OR **ST** POSITION
7-8:CLOSED WITH THE IGNITION SW AT **ST** POSITION

○ : PARTS LOCATION

CODE		SEE PAGE	CODE		SEE PAGE	CODE		SEE PAGE
F10	A	60(1MZ-FE LHD)	F12	C	62(5S-FE LHD)	F15	F	60(1MZ-FE LHD)
		62(5S-FE LHD)	F13	D	60(1MZ-FE LHD)			62(5S-FE LHD)
F11	B	60(1MZ-FE LHD)			62(5S-FE LHD)	I15		64(LHD)
		62(5S-FE LHD)	F14	E	60(1MZ-FE LHD)			
F12	C	60(1MZ-FE LHD)			62(5S-FE LHD)			

: RELAY BLOCKS

CODE	SEE PAGE	RELAY BLOCKS (RELAY BLOCK LOCATION)
1	58	ENGINE ROOM R/B NO.1 (ENGINE COMPARTMENT LEFT)
2	59(LHD)	ENGINE ROOM R/B NO.2 (NEAR THE BATTERY)
3	59	ENGINE ROOM R/B NO.3 (RADIATOR UPPER SUPPORT LH)

: JUNCTION BLOCK AND WIRE HARNESS CONNECTOR

CODE	SEE PAGE	JUNCTION BLOCK AND WIRE HARNESS (CONNECTOR LOCATION)
1B	52(LHD)	COWL WIRE AND INSTRUMENT PANEL J/B (LOWER FINISH PANEL)
1K		
2A	56	ENGINE ROOM MAIN WIRE AND ENGINE ROOM J/B NO.2 (ENGINE COMPARTMENT LEFT)
2B		
2G		
2L	56(LHD)	COWL WIRE AND ENGINE ROOM J/B NO.2 (ENGINE COMPARTMENT LEFT)

: SPLICE POINTS

CODE	SEE PAGE	WIRE HARNESS WITH SPLICE POINTS	CODE	SEE PAGE	WIRE HARNESS WITH SPLICE POINTS
E 3	82(1MZ-FE LHD)	ENGINE ROOM MAIN WIRE	I 2	88(LHD)	COWL WIRE
	84(5S-FE LHD)				

F10 Ⓐ

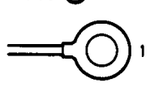

F11 Ⓑ

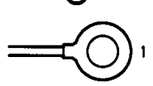

F12 Ⓒ

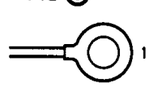

F13 Ⓓ

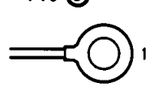

F14 Ⓔ

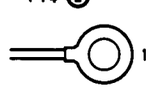

F15 Ⓕ ORANGE

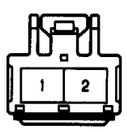

I15

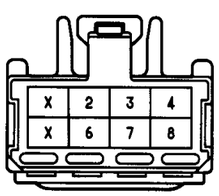

STARTING AND IGNITION(LHD)

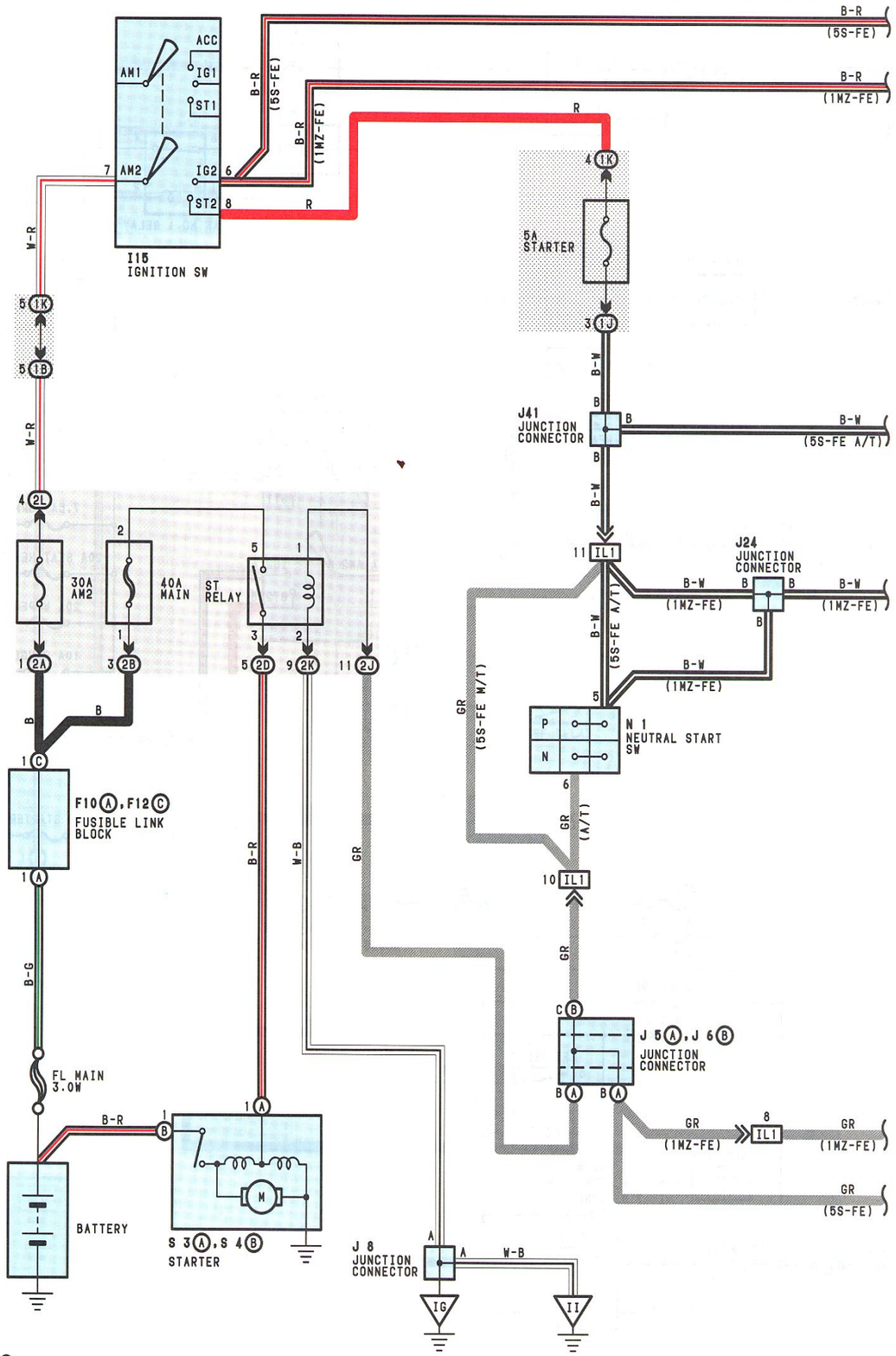

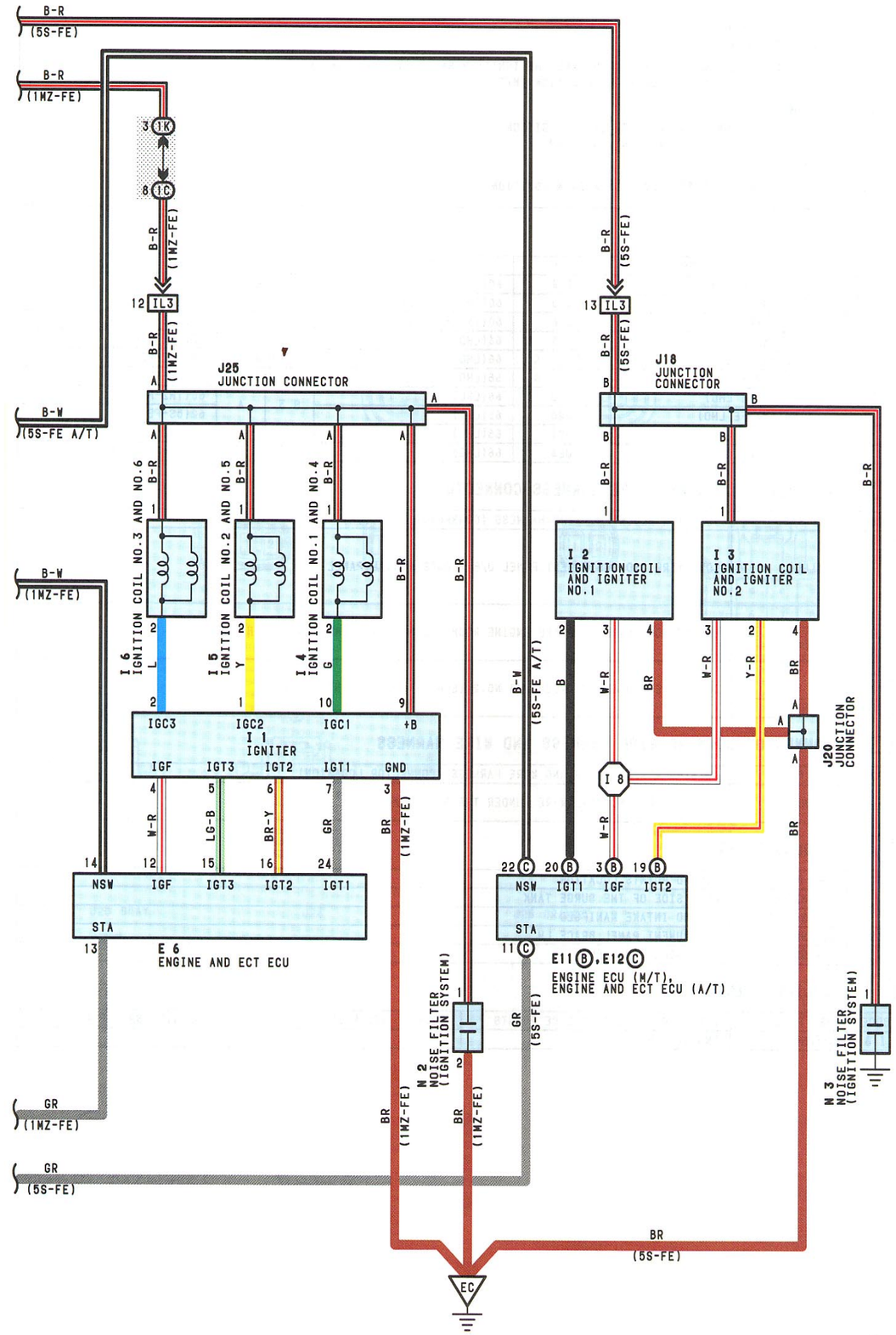

STARTING AND IGNITION(LHD)

SERVICE HINTS

S 3 Ⓐ, S 4 Ⓑ STARTER

POINTS CLOSED WITH THE NEUTRAL START SW ON AND THE IGNITION SW AT ST POSITION (A/T)
POINTS CLOSED WITH THE IGNITION SW AT ST POSITION (M/T)

I15 IGNITION SW

7-6:CLOSED WITH THE IGNITION SW AT ON OR ST POSITION
7-8:CLOSED WITH THE IGNITION SW AT ST POSITION

N 1 NEUTRAL START SW

5-6:CLOSED WITH THE A/T SHIFT LEVER IN P OR N POSITION

○ : PARTS LOCATION

CODE		SEE PAGE	CODE		SEE PAGE	CODE		SEE PAGE
E 6		64(1MZ-FE LHD)	I 4		60(1MZ-FE LHD)	J25		66(LHD)
E11	B	64(5S-FE LHD)	I 5		60(1MZ-FE LHD)	J41		66(LHD)
E12	C	64(5S-FE LHD)	I 6		60(1MZ-FE LHD)	N 1		60(1MZ-FE LHD)
F10	A	60(1MZ-FE LHD)	I15		64(LHD)			62(5S-FE LHD)
		62(5S-FE LHD)	J 5	A	66(LHD)	N 2		60(1MZ-FE LHD)
F12	C	60(1MZ-FE LHD)	J 6	B	66(LHD)	N 3		62(5S-FE LHD)
		62(5S-FE LHD)	J 8		66(LHD)	S 3	A	60(1MZ-FE LHD)
I 1		60(1MZ-FE LHD)	J20		66(LHD)			62(5S-FE LHD)
I 2		62(5S-FE LHD)	J21		66(LHD)	S 4	B	60(1MZ-FE LHD)
I 3		62(5S-FE LHD)	J24		66(LHD)			62(5S-FE LHD)

: JUNCTION BLOCK AND WIRE HARNESS CONNECTOR

CODE	SEE PAGE	JUNCTION BLOCK AND WIRE HARNESS (CONNECTOR LOCATION)
1B	52(LHD)	COWL WIRE AND INSTRUMENT PANEL J/B (LOWER FINISH PANEL)
1C		
1J		
1K		
2A	56	ENGINE ROOM MAIN WIRE AND ENGINE ROOM J/B NO.2 (ENGINE COMPARTMENT LEFT)
2B		
2D		
2J	56	COWL WIRE AND ENGINE ROOM J/B NO.2 (ENGINE COMPARTMENT LEFT)
2K		
2L	56(LHD)	

: CONNECTOR JOINING WIRE HARNESS AND WIRE HARNESS

CODE	SEE PAGE	JOINING WIRE HARNESS AND WIRE HARNESS (CONNECTOR LOCATION)
IL1	88(LHD)	ENGINE WIRE AND COWL WIRE (UNDER THE BLOWER MOTOR)
IL3		

▽ : GROUND POINTS

CODE	SEE PAGE	GROUND POINTS LOCATION
EC	82(1MZ-FE LHD)	REAR SIDE OF THE SURGE TANK
	84(5S-FE LHD)	BEHIND INTAKE MANIFOLD
IG	86(LHD)	INSTRUMENT PANEL BRACE LH
II	86(LHD)	COWL SIDE PANEL RH

: SPLICE POINTS

CODE	SEE PAGE	WIRE HARNESS WITH SPLICE POINTS	CODE	SEE PAGE	WIRE HARNESS WITH SPLICE POINTS
I 8	88(LHD)	ENGINE WIRE			

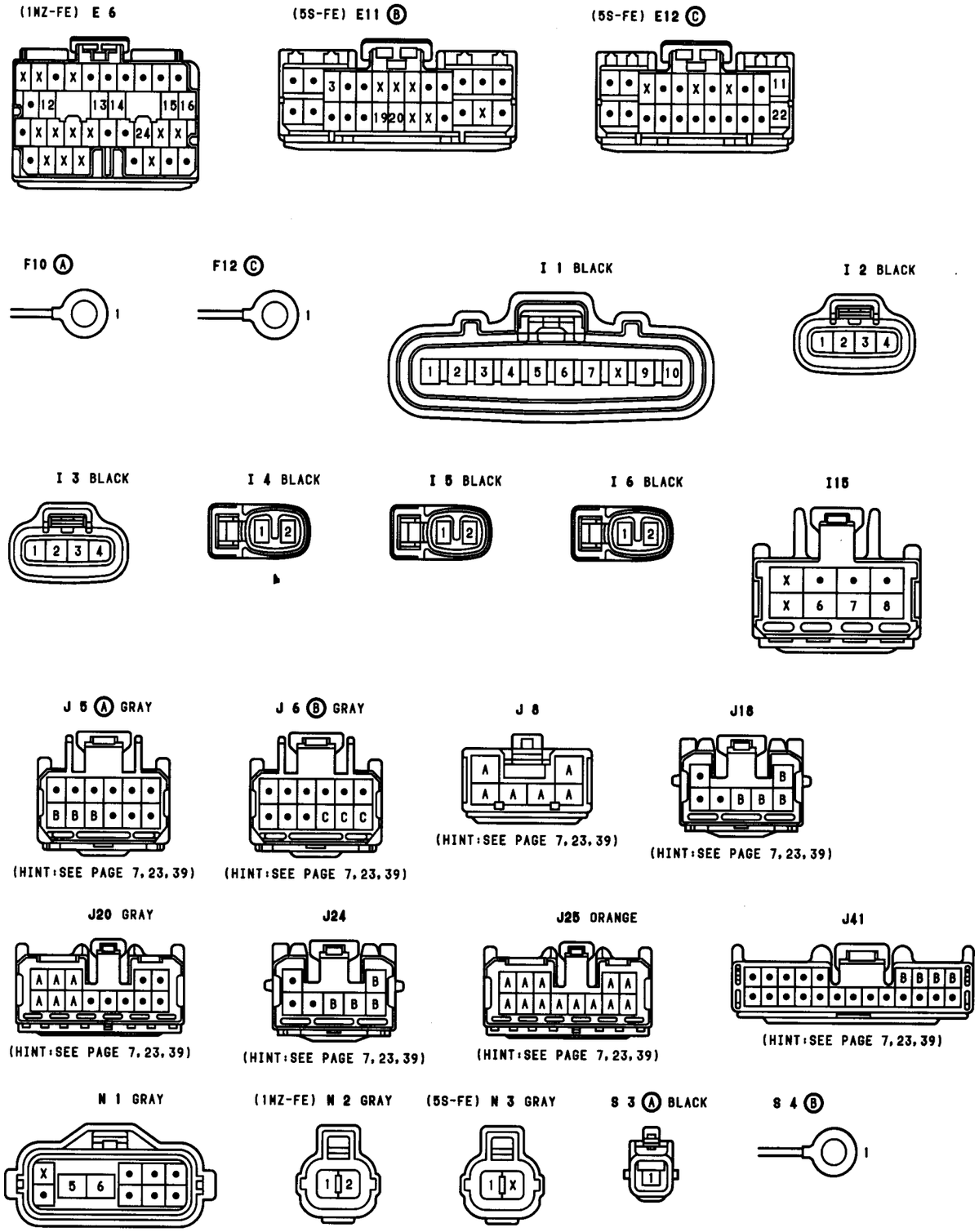

CHARGING(LHD)

* 1:W/ DAYTIME RUNNING LIGHT

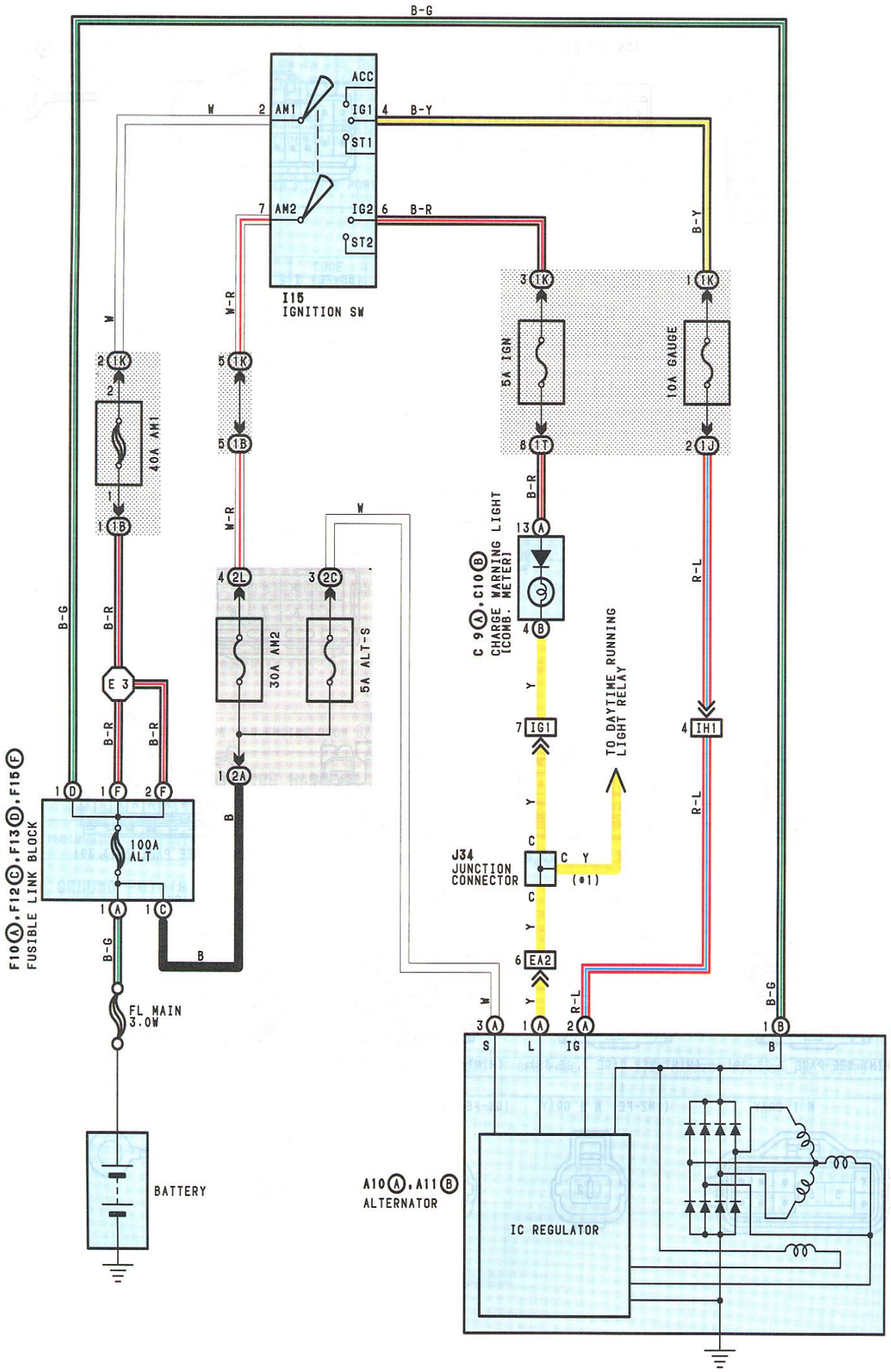

SERVICE HINTS

A10 Ⓐ **ALTERNATOR**

Ⓐ 3-GROUND: 13.9-15.1 VOLTS WITH THE ENGINE RUNNING AT 2000 RPM AND 25°C (77°F)
13.5-14.3 VOLTS WITH THE ENGINE RUNNING AT 5000 RPM AND 115°C (239°F)

Ⓐ 1-GROUND: 0-4 VOLTS WITH THE IGNITION SW AT ON POSITION AND THE ENGINE NOT RUNNING

○ : PARTS LOCATION

CODE		SEE PAGE	CODE		SEE PAGE	CODE		SEE PAGE
A10	A	60(1MZ-FE LHD)	F10	A	60(1MZ-FE LHD)	F15	F	60(1MZ-FE LHD)
		62(5S-FE LHD)			62(5S-FE LHD)			62(5S-FE LHD)
A11	B	60(1MZ-FE LHD)	F12	C	60(1MZ-FE LHD)	I15		64(LHD)
		62(5S-FE LHD)			62(5S-FE LHD)	J34		66(LHD)
C 9	A	64(LHD)	F13	D	60(1MZ-FE LHD)			
C10	B	64(LHD)			62(5S-FE LHD)			

: JUNCTION BLOCK AND WIRE HARNESS CONNECTOR

CODE	SEE PAGE	JUNCTION BLOCK AND WIRE HARNESS (CONNECTOR LOCATION)
1B	52(LHD)	COWL WIRE AND INSTRUMENT PANEL J/B (LOWER FINISH PANEL)
1J		
1K		
1T	52(LHD)	INSTRUMENT PANEL WIRE AND INSTRUMENT PANEL J/B (LOWER FINISH PANEL)
2A	56	ENGINE ROOM MAIN WIRE AND ENGINE ROOM J/B NO.2 (ENGINE COMPARTMENT LEFT)
2C		
2L	56(LHD)	COWL WIRE AND ENGINE ROOM J/B NO.2 (ENGINE COMPARTMENT LEFT)

□ : CONNECTOR JOINING WIRE HARNESS AND WIRE HARNESS

CODE	SEE PAGE	JOINING WIRE HARNESS AND WIRE HARNESS (CONNECTOR LOCATION)
EA2	82(1MZ-FE LHD)	COWL WIRE AND ENGINE ROOM MAIN WIRE (UNDER THE ENGINE ROOM J/B NO.2)
	84(5S-FE LHD)	
IG1	86(LHD)	INSTRUMENT PANEL WIRE AND COWL WIRE (LOWER FINISH PANEL)
IH1	86(LHD)	ENGINE ROOM MAIN WIRE AND COWL WIRE (RIGHT KICK PANEL)

⬡ : SPLICE POINTS

CODE	SEE PAGE	WIRE HARNESS WITH SPLICE POINTS	CODE	SEE PAGE	WIRE HARNESS WITH SPLICE POINTS
E 3	82(1MZ-FE LHD)	ENGINE ROOM MAIN WIRE	E 3	84(5S-FE LHD)	ENGINE ROOM MAIN WIRE

A10 Ⓐ BLACK

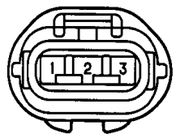

A11 Ⓑ

C 9 Ⓐ BLUE

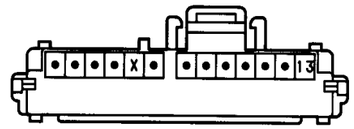

C10 Ⓑ

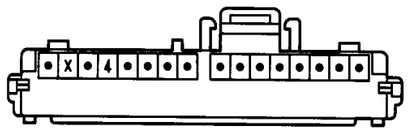

F10 Ⓐ

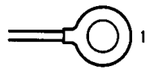

F12 Ⓒ

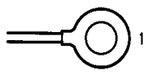

F13 Ⓓ

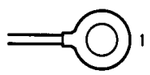

F15 Ⓕ ORANGE

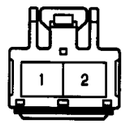

I15

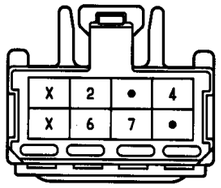

J34

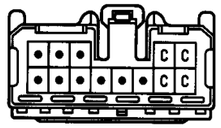

(HINT: SEE PAGE 7, 23, 39)

SYSTEM OUTLINE

THIS SYSTEM UTILIZES AN ENGINE AND ECT ECU AND MAINTAINS OVERALL CONTROL OF THE ENGINE, TRANSMISSION AND SO ON. AN OUTLINE OF THE ENGINE CONTROL IS EXPLAINED HERE.

1. INPUT SIGNALS

(1) WATER TEMP. SIGNAL SYSTEM
THE EFI WATER TEMP. SENSOR DETECTS THE WATER TEMP. AND HAS A BUILT-IN THERMISTOR WITH A RESISTANCE WHICH VARIES ACCORDING TO THE WATER TEMP. IS INPUT INTO **TERMINAL THW** OF THE ENGINE AND ECT ECU AS A CONTROL SIGNAL.

(2) INTAKE AIR TEMP. SIGNAL SYSTEM
THE INTAKE AIR TEMP. SENSOR IS INSTALLED IN THE AIR FLOW METER AND DETECTS THE INTAKE AIR TEMP., WHICH IS INPUT AS A CONTROL SIGNAL INTO **TERMINAL THA** OF THE ENGINE AND ECT ECU.

(3) OXYGEN SENSOR SIGNAL SYSTEM
THE OXYGEN DENSITY IN THE EXHAUST EMISSIONS IS DETECTED AND INPUT AS A CONTROL SIGNAL TO **TERMINALS OXL1** AND **OXR1** OF THE ENGINE AND ECT ECU.

(4) RPM SIGNAL SYSTEM
CAMSHAFT POSITION AND CRANKSHAFT POSITION ARE DETECTED BY THE CAMSHAFT POSITION SENSOR AND CRANKSHAFT POSITION SENSOR. THE CAMSHAFT POSITION IS INPUT AS A CONTROL SIGNAL TO **TERMINAL G22+** OF THE ENGINE AND ECT ECU, AND THE ENGINE RPM IS INPUT INTO **TERMINAL NE+**.

(5) THROTTLE SIGNAL SYSTEM
THE THROTTLE POSITION SENSOR DETECTS THE THROTTLE VALVE OPENING ANGLE AS A CONTROL SIGNAL, WHICH IS INPUT INTO **TERMINAL VTA1** OF THE ENGINE AND ECT ECU.

(6) VEHICLE SPEED SIGNAL SYSTEM
THE SPEED SENSOR, INSTALLED INSIDE THE TRANSMISSION DETECTS THE VEHICLE SPEED AND INPUTS A CONTROL SIGNAL INTO **TERMINAL SP1** OF THE ENGINE AND ECT ECU.

(7) NEUTRAL START SW SIGNAL SYSTEM
THE NEUTRAL START SW DETECTS WHETHER THE SHIFT POSITION IS IN NEUTRAL, PARKING OR NOT, AND INPUTS A CONTROL SIGNAL INTO **TERMINAL STA** OF THE ENGINE AND ECT ECU.

(8) A/C SW SIGNAL SYSTEM
THE OPERATING VOLTAGE OF THE A/C MAGNETIC CLUTCH IS DETECTED AND INPUT IN THE FORM OF A CONTROL SIGNAL TO **TERMINAL A/C** OF THE ENGINE AND ECT ECU.

(9) BATTERY SIGNAL SYSTEM
VOLTAGE IS CONSTANTLY APPLIED TO **TERMINAL BATT** OF THE ENGINE AND ECT ECU. WHEN THE IGNITION SW IS TURNED ON, VOLTAGE FOR THE ENGINE AND ECT ECU OPERATION IS APPLIED TO **TERMINAL +B** OF THE ENGINE AND ECT ECU VIA THE EFI RELAY.

(10) INTAKE AIR VOLUME SIGNAL SYSTEM
INTAKE AIR VOLUME IS DETECTED BY THE AIR FLOW METER AND A SIGNAL IS INPUT INTO **TERMINAL VG** OF THE ENGINE AND ECT ECU AS A CONTROL SIGNAL.

(11) STARTER SIGNAL SYSTEM
TO CONFIRM WHETHER THE ENGINE IS CRANKIKG, THE VOLTAGE APPLIED TO THE STARTER MOTOR DURING CRANKING IS DETECTED AND THE SIGNAL IS INPUT INTO **TERMINAL NSW** OF THE ENGINE AND ECT ECU AS A CONTROL SIGNAL.

(12) ENGINE KNOCK SIGNAL SYSTEM
ENGINE KNOCKING IS DETECTED BY THE KNOCK SENSOR 1 AND 2, AND THE SIGNALS ARE INPUT INTO **TERMINALS KNKR** AND **KNKL** OF THE ENGINE AND ECT ECU AS A CONTROL SIGNAL.

2. CONTROL SYSTEM

- EFI SYSTEM
  THE EFI SYSTEM MONITORS THE ENGINE CONDITION THROUGH THE SIGNALS, WHICH ARE INPUT FROM EACH SENSOR (INPUT SIGNALS (1) TO (12)). THE BEST FUEL INJECTION VOLUME IS DECIDED BASED ON THIS DATA AND THE PROGRAM MEMORIZED BY THE ENGINE AND ECT ECU, AND THE CONTROL SIGNAL IS OUTPUT TO **TERMINALS #10, #20, #30, #40, #50** AND **#60** OF THE ENGINE AND ECT ECU TO OPERATE THE INJECTOR (INJECT THE FUEL). THE EFI SYSTEM PRODUCES CONTROL OF FUEL INJECTION OPERATION BY THE ENGINE AND ECT ECU IN RESPONSE TO THE DRIVING CONDITIONS.
- ESA SYSTEM
  THE ESA SYSTEM MONITORS THE ENGINE CONDITION THROUGH THE SIGNALS, WHICH ARE INPUT TO THE ENGINE AND ECT ECU FROM EACH SENSOR (INPUT SIGNALS FROM 1,3,11). THE BEST IGNITION TIMING IS DECIDED ACCORDING TO THIS DATA AND THE MEMORIZED DATA IN THE ENGINE AND ECT ECU AND THE CONTROL SIGNAL IS OUTPUT TO **TERMINALS IGT1, IGT2** AND **IGT3**. THIS SIGNAL CONTROLS THE IGNITER TO PROVIDE THE BEST IGNITION TIMING FOR THE DRIVING CONDITIONS.
- ISC SYSTEM
  THE ISC SYSTEM (ROTARY SOLENOID TYPE) INCREASES THE RPM AND PROVIDES IDLE STABILITY FOR FAST IDLE-UP WHEN THE ENGINE IS COLD, AND WHEN THE IDLE SPEED HAS DROPPED DUE TO ELECTRICAL LOAD AND SO ON. THE ENGINE AND ECT ECU EVALUATES THE SIGNALS FROM EACH SENSOR (INPUT SIGNALS FROM 1,3,4,7,8), CURRENT IS OUTPUT TO **TERMINALS RSO** AND **RSC** TO CONTROL ISC VALVE.
- ACIS
  ACIS INCLUDES A VALVE IN THE BULKHEAD SEPARATING THE SURGE TANK INTO TWO PARTS. THIS VALVE IS OPENED AND CLOSED IN ACCORDANCE WITH THE DRIVING CONDITIONS TO CONTROL THE INTAKE MANIFOLD LENGTH IN TWO STAGES FOR INCREASED ENGINE OUTPUT IN ALL RANGES FROM LOW TO HIGH SPEEDS.
  THE ENGINE AND ECT ECU JUDGES THE ENGINE SPEED BY THE SIGNALS ((3), (4)) FROM EACH SENSOR AND OUTPUTS SIGNALS TO THE **TERMINAL ACIS** TO CONTROL THE VSV (ACIS).
- EGR CONTROL SYSTEM
  THE EGR CONTROL SYSTEM DETECTS THE SIGNAL FROM EACH SENSOR (INPUT SIGNALS FROM 1,4,9,10), CURRENT IS OUTPUT TO **TERMINAL EGR** TO CONTROL THE EGR VALVE.

3. DIAGNOSIS SYSTEM

WITH THE DIAGNOSIS SYSTEM, WHEN THERE IS A MALFUNCTIONING IN THE ENGINE ECU SIGNAL SYSTEM, THE MALFUNCTION SYSTEM IS RECORDED IN THE MEMORY THE MALFUNCTIONING SYSTEM CAN THEN BE FOUND BY READING THE DISPLAY (CODE) OF THE CHECK ENGINE WARNING LIGHT.

4. FAIL-SAFE SYSTEM

WHEN A MALFUNCTION OCCURS IN ANY SYSTEMS, IF THERE IS A POSSIBILITY OF ENGINE TROUBLE BEING CAUSED BY CONTINUED CONTROL BASED ON THE SIGNALS FROM THAT SYSTEM, THE FAIL-SAFE SYSTEM EITHER CONTROLS THE SYSTEM BY USING DATA (STANDARD VALUES) RECORDED IN THE ENGINE AND ECT ECU MEMORY OR ELSE STOPS THE ENGINE.

ENGINE CONTROL(1MZ-FE LHD)

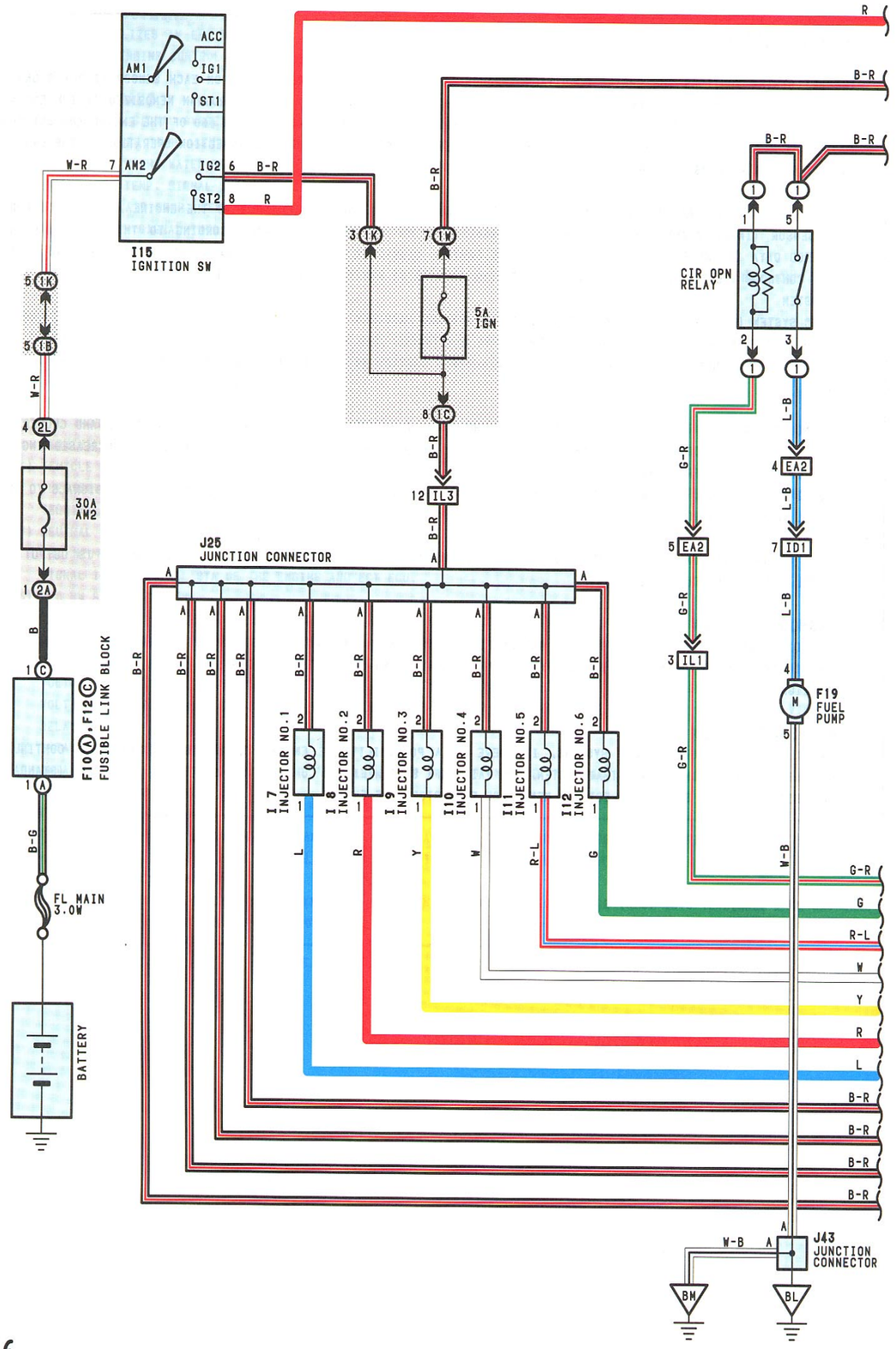

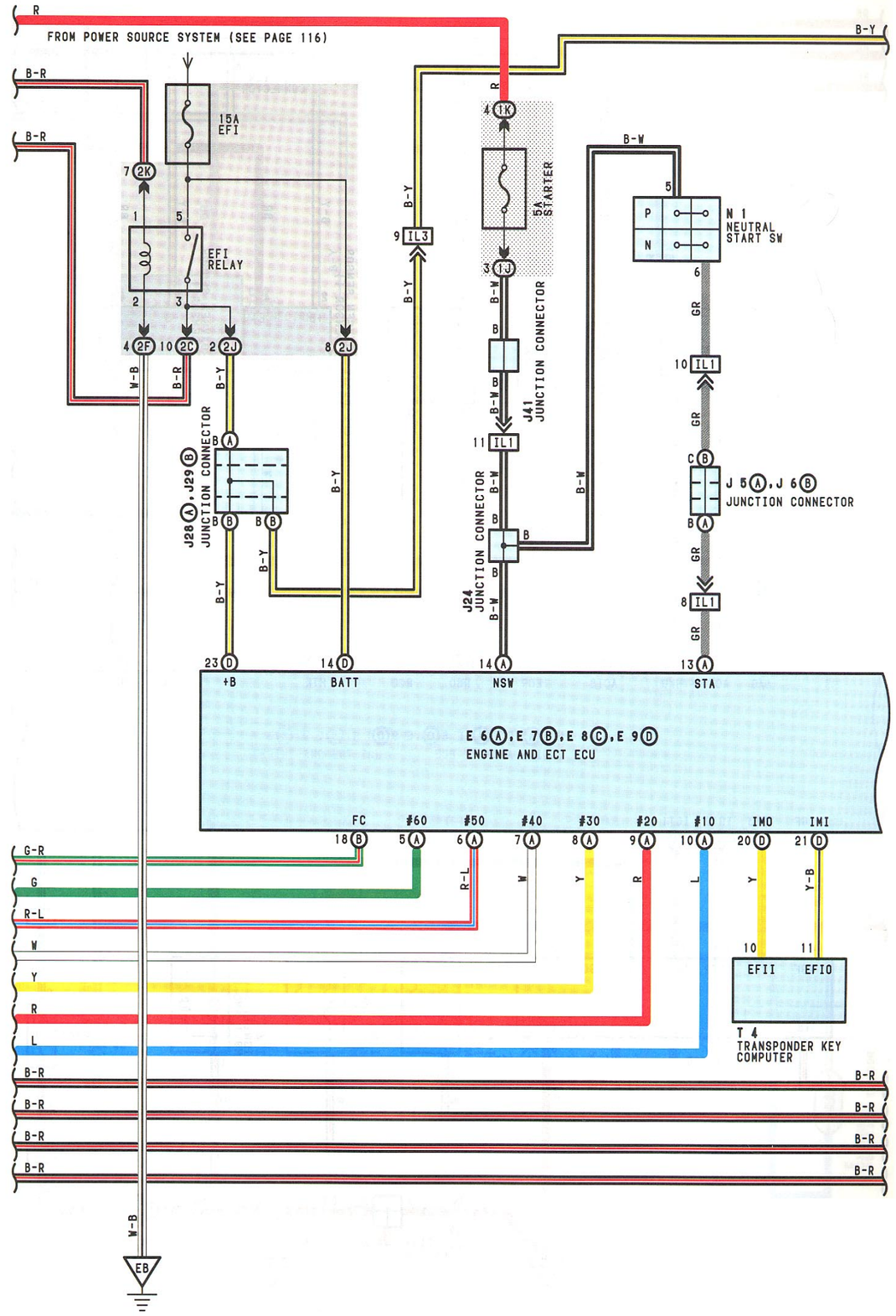

ENGINE CONTROL(1MZ-FE LHD)

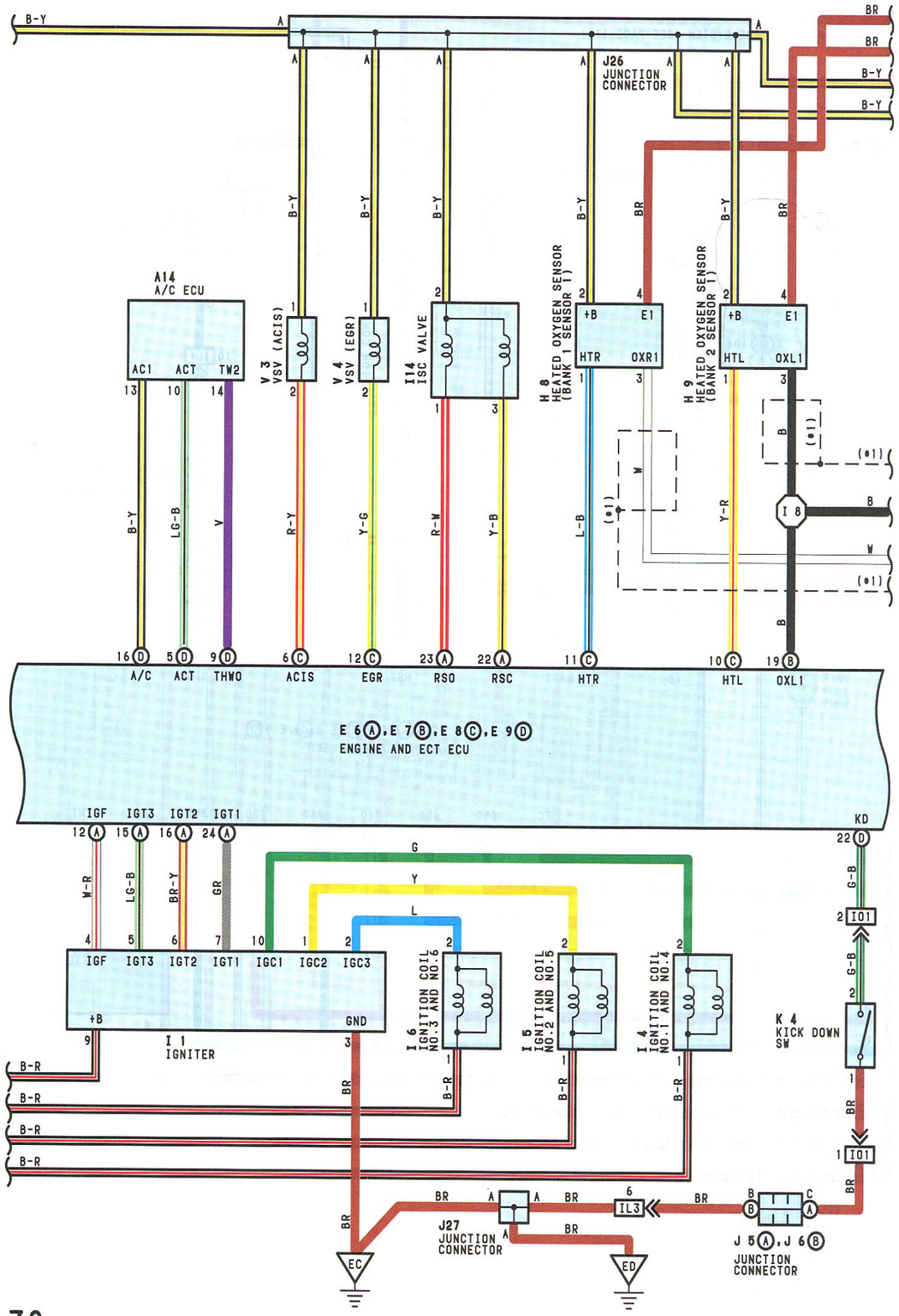

* 1:SHIELDED
* 2:LEADED GASOLINE
* 3:UNLEADED GASOLINE

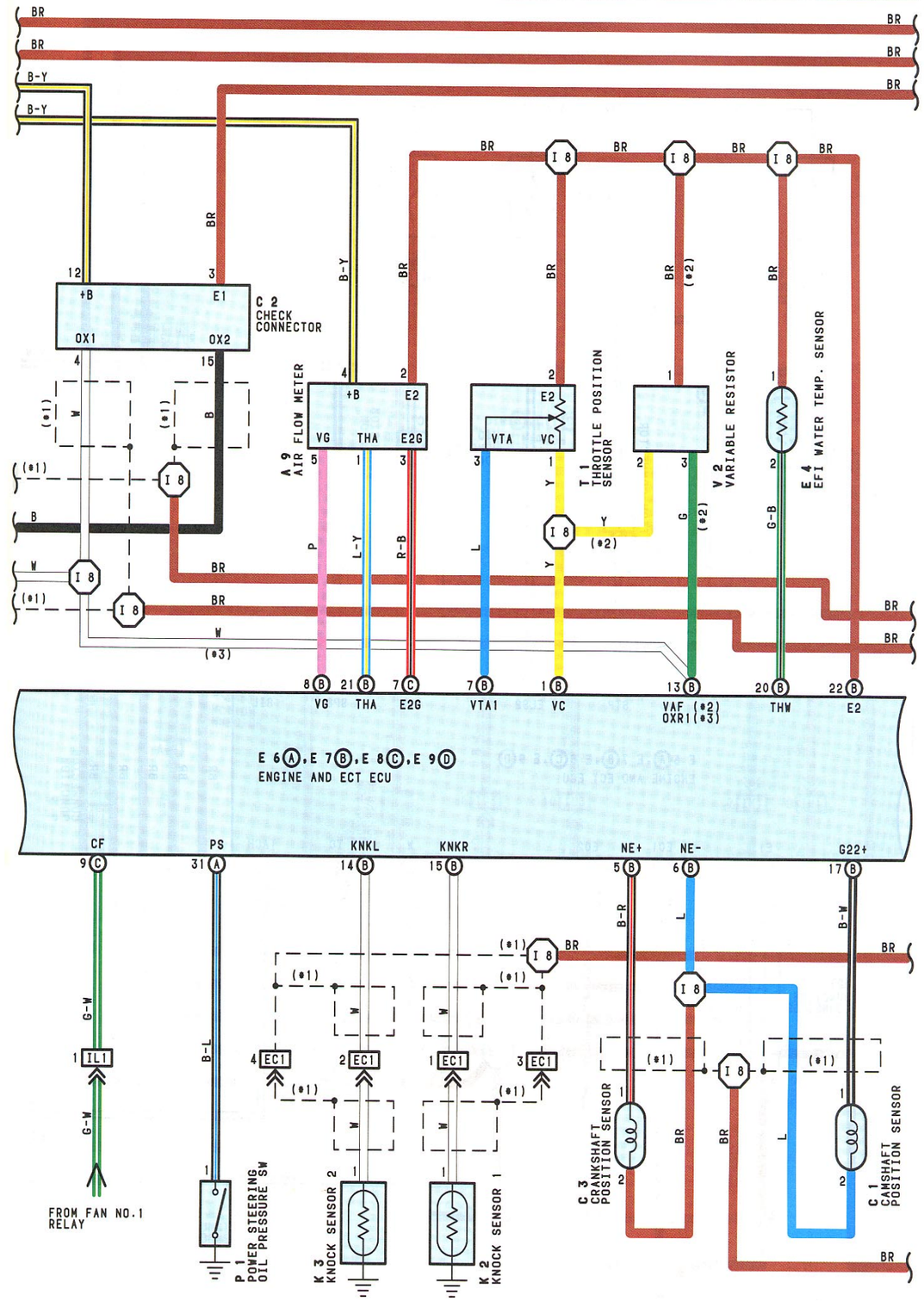

ENGINE CONTROL(1MZ-FE LHD)

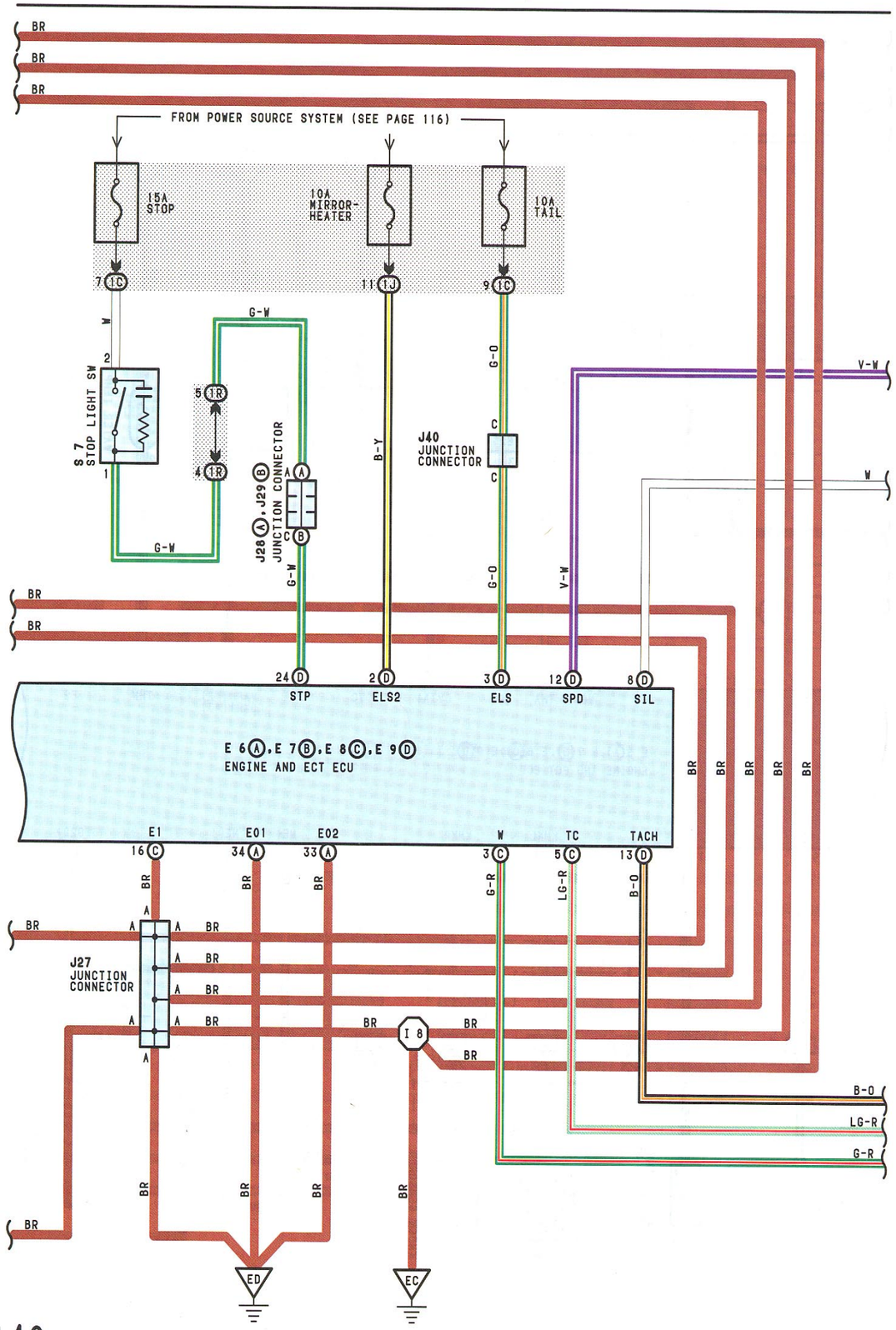

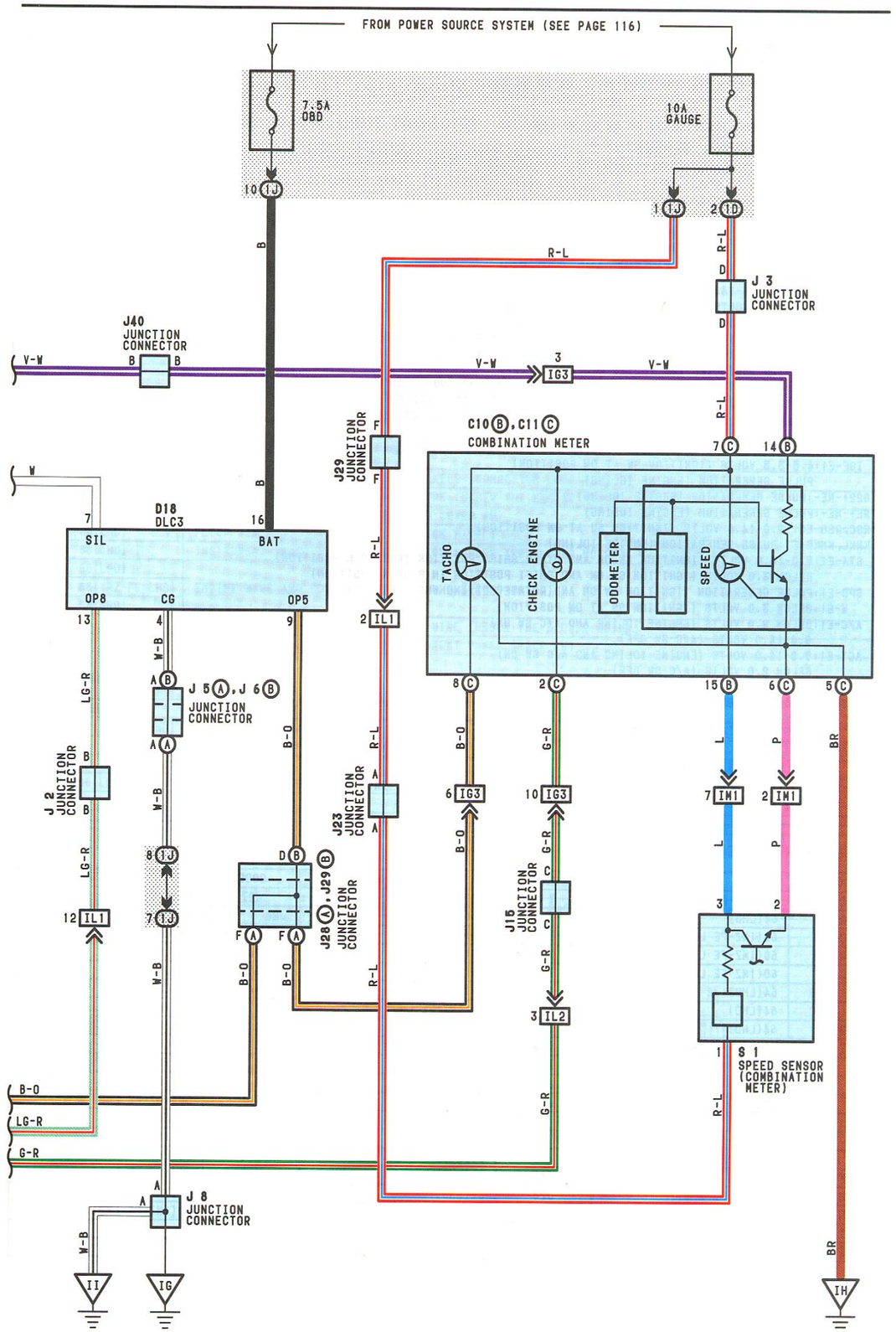

ENGINE CONTROL(1MZ-FE LHD)

SERVICE HINTS

CIR OPN RELAY

(1) 3-(1) 5:CLOSED WITH THE IGNITION SW AT ON OR ST POSITION

EFI RELAY

5-3:CLOSED WITH THE IGNTIION SW AT ON OR ST POSITION

E 4 EFI WATER TEMP. SENSOR

1-2:10.0 -20.0 KΩ (-20°C, -4°F)
4.0 - 7.0 KΩ (0°C, 32°F)
2.0 - 3.0 KΩ (20°C, 68°F)
0.9 - 1.3 KΩ (40°C, 104°F)
0.4 - 0.7 KΩ (60°C, 140°F)
0.2 - 0.4 KΩ (80°C, 176°F)

E 6(A),E 7(B),E 8(C),E 9(D) ENGINE AND ECT ECU

BATT-E1:ALWAYS 9.0-14.0 VOLTS
+B-E1:9.0-14.0 VOLTS (IGNITION SW AT ON POSITION)
VC-E1:ALWAYS 4.5-5.5 VOLTS (IGNITION SW AT ON POSITION)
VTA1-E2:0.3-0.8 VOLTS (IGNITION SW ON AND THROTTLE VALVE FULLY CLOSED)
3.2-4.9 VOLTS (IGNITION SW ON AND THROTTLE VALVE FULLY OPEN)
VG-E2G:1.1-1.5 VOLTS (ENGINE IDLING AND A/C SW OFF)
THA-E2:0.5-3.4 VOLTS (IGNITION SW ON AND INTAKE AIR TEMP. 20°C, 68°F)
THW-E2:0.2-1.0 VOLTS (ENGINE IDLING AND COOLANT TEMP. 80°C, 176°F)
#10,#20,#30,#40,#50,#60-E01:9.0-14.0 VOLTS (IGNITION SW AT ON POSITION)
PULSE GENERATION (ENGINE IDLING)
IGT1,IGT2,IGT3-E1:PULSE GENERATION (ENGINE IDLING)
IGF-E1:4.5-5.5 VOLTS (IGNITION SW AT ON POSITION)
PULSE GENERATION (ENGINE IDLING)
G22+-NE-:PULSE GENERATION (ENGINE IDLING)
NE+-NE-:PULSE GENERATION (ENGINE IDLING)
RSC,RSO-E01:9.0-14.0 VOLTS (IGNITION SW AT ON POSITION)
KNKL,KNKR-E1:PULSE GENERATION (ENGINE IDLING)
STA-E1:9.0-14.0 VOLTS (IGNITION SW ON AND OTHER SHIFT POSITION IN P OR N POSITION)
BELOW 3.0 VOLTS (IGNITION SW ON AND SHIFT POSITION IN P OR N POSITION)
SPD-E1:PULSE GENERATION (IGNITION SW ON AND ROTATE DRIVING WHEEL SLOWLY)
W-E1:BELOW 3.0 VOLTS (IGNITION SW AT ON POSITION)
A/C-E1:BELOW 2.0 VOLTS (ENGINE IDLING AND A/C SW ON)
9.0-14.0 VOLTS (A/C SW OFF)
ACT-E1:9.0-14.0 VOLTS (ENGINE IDLING AND A/C SW ON)
BELOW 2.0 VOLTS (A/C SW OFF)
ACIS-E01:9.0-14.0 VOLTS (IGNITION SW AT ON POSITION)
NSW-E1:6.0 VOLTS OR MORE (ENGINE CRANKING)

I 7,I 8,I 9,I10,I11,I12 INJECTOR

2-1:APPROX. 13.8 Ω

T 1 THROTTLE POSITION SENSOR

1-2:0.2-5.7 KΩ WITH CLEARANCE BETWEEN LEVER AND STOP SCREW 0 MM (0 IN.)
1-3:2.0-10.2 KΩ WITH THROTTLE VALVE FULLY OPEN

○ : PARTS LOCATION

CODE		SEE PAGE	CODE		SEE PAGE	CODE		SEE PAGE
A 9		60(1MZ-FE LHD)	I 5		60(1MZ-FE LHD)	J27		66(LHD)
A14		64(LHD)	I 6		60(1MZ-FE LHD)	J28	A	66(LHD)
C 1		60(1MZ-FE LHD)	I 7		60(1MZ-FE LHD)	J29	B	66(LHD)
C 2		60(1MZ-FE LHD)	I 8		60(1MZ-FE LHD)	J40		66(LHD)
C 3		60(1MZ-FE LHD)	I 9		60(1MZ-FE LHD)	J41		66(LHD)
C10	B	64(LHD)	I10		60(1MZ-FE LHD)	J43		68(LHD)
C11	C	64(LHD)	I11		60(1MZ-FE LHD)	K 2		60(1MZ-FE LHD)
D18		64(LHD)	I12		60(1MZ-FE LHD)	K 3		60(1MZ-FE LHD)
E 4		60(1MZ-FE LHD)	I14		60(1MZ-FE LHD)	K 4		66(LHD)
E 6	A	64(1MZ-FE LHD)	I15		64(LHD)	N 1		60(1MZ-FE LHD)
E 7	B	64(1MZ-FE LHD)	J 2		66(LHD)	P 1		60(1MZ-FE LHD)
E 8	C	64(1MZ-FE LHD)	J 3		66(LHD)	S 1		60(1MZ-FE LHD)
E 9	D	64(1MZ-FE LHD)	J 5	A	66(LHD)	S 7		66(LHD)
F10	A	60(1MZ-FE LHD)	J 6	B	66(LHD)	T 1		60(1MZ-FE LHD)
F12	C	60(1MZ-FE LHD)	J 8		66(LHD)	T 4		66(LHD)
F19		68(LHD)	J15		66(LHD)	V 2		60(1MZ-FE LHD)
H 8		60(1MZ-FE LHD)	J23		66(LHD)	V 3		60(1MZ-FE LHD)
H 9		60(1MZ-FE LHD)	J24		66(LHD)	V 4		60(1MZ-FE LHD)
I 1		60(1MZ-FE LHD)	J25		66(LHD)			
I 4		60(1MZ-FE LHD)	J26		66(LHD)			

: RELAY BLOCKS

CODE	SEE PAGE	RELAY BLOCKS (RELAY BLOCK LOCATION)
1	58	ENGINE ROOM R/B NO.1 (ENGINE COMPARTMENT LEFT)

: JUNCTION BLOCK AND WIRE HARNESS CONNECTOR

CODE	SEE PAGE	JUNCTION BLOCK AND WIRE HARNESS (CONNECTOR LOCATION)
1B	52(LHD)	COWL WIRE AND INSTRUMENT PANEL J/B (LOWER FINISH PANEL)
1C		
1D	52(LHD)	INSTRUMENT PANEL WIRE AND INSTRUMENT PANEL J/B (LOWER FINISH PANEL)
1H		
1J	52(LHD)	COWL WIRE AND INSTRUMENT PANEL J/B (LOWER FINISH PANEL)
1K		
1R		
1W		
2A	56	ENGINE ROOM MAIN WIRE AND ENGINE ROOM J/B NO.2 (ENGINE COMPARTMENT LEFT)
2C		
2F		
2J	56	COWL WIRE AND ENGINE ROOM J/B NO.2 (ENGINE COMPARTMENT LEFT)
2K		
2L	56(LHD)	

: CONNECTOR JOINING WIRE HARNESS AND WIRE HARNESS

CODE	SEE PAGE	JOINING WIRE HARNESS AND WIRE HARNESS (CONNECTOR LOCATION)
EA2	82(1MZ-FE LHD)	COWL WIRE AND ENGINE ROOM MAIN WIRE (UNDER THE ENGINE ROOM J/B NO.2)
EC1	82(1MZ-FE LHD)	ENGINE WIRE AND SENSOR WIRE (HEAD COVER RH)
ID1	86(LHD)	FLOOR WIRE AND COWL WIRE (LEFT KICK PANEL)
IG3	86(LHD)	INSTRUMENT PANEL WIRE AND COWL WIRE (UNDER THE BLOWER MOTOR)
IL1	88(LHD)	ENGINE WIRE AND COWL WIRE (UNDER THE BLOWER MOTOR)
IL2	88(1MZ-FE LHD)	
IL3	88(LHD)	
IM1	88(LHD)	ENGINE WIRE AND INSTRUMENT PANEL WIRE (UNDER THE BLOWER MOTOR)
IO1	88(LHD)	COWL WIRE AND SWITCH WIRE (INSTRUMENT PANEL BRACE LH)

: GROUND POINTS

CODE	SEE PAGE	GROUND POINTS LOCATION
EB	82(1MZ-FE LHD)	BEHIND HEADLIGHT LH
EC	82(1MZ-FE LHD)	REAR SIDE OF THE SURGE TANK
ED	82(1MZ-FE LHD)	SURGE TANK RH
IG	86(LHD)	INSTRUMENT PANEL BRACE LH
II	86(LHD)	COWL SIDE PANEL RH
BL	90(LHD)	UNDER THE LEFT CENTER PILLAR
BW	90(LHD)	BACK PANEL CENTER

: SPLICE POINTS

CODE	SEE PAGE	WIRE HARNESS WITH SPLICE POINTS	CODE	SEE PAGE	WIRE HARNESS WITH SPLICE POINTS
I 8	88(LHD)	ENGINE WIRE			

A 9 BLACK

A14

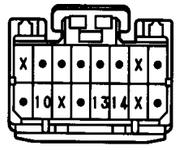

C 1 BLACK

C 2 BLACK

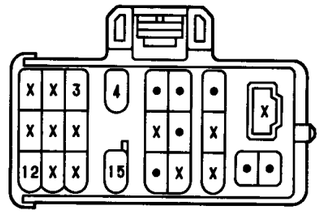

ENGINE CONTROL(1MZ-FE LHD)

C 3 BLACK

C10 Ⓑ

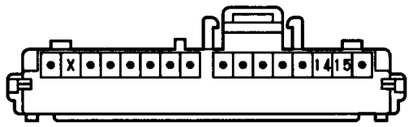

C11 Ⓒ BROWN

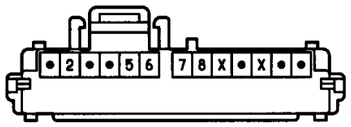

D18

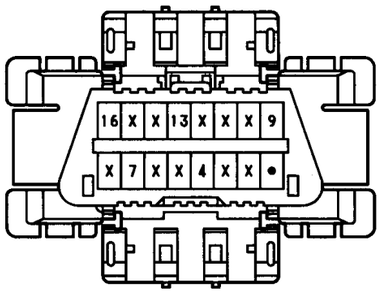

E 4 DARK GRAY

E 6 Ⓐ

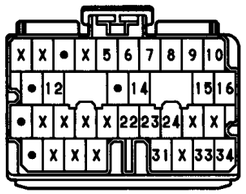

E 7 Ⓑ

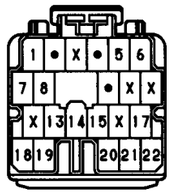

E 8 Ⓒ

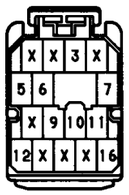

E 9 Ⓓ

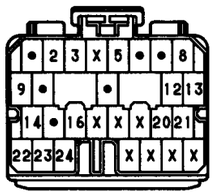

F10 Ⓐ

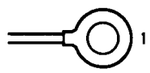

F12 Ⓒ

F19

H 8 DARK GRAY

H 9 DARK GRAY

I 1 BLACK

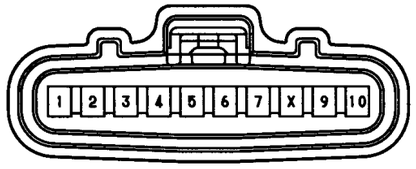

I 4 BLACK

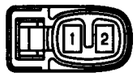

I 5 BLACK

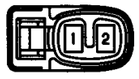

I 6 BLACK

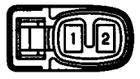

I 7 GRAY

I 8 GRAY

I 9 GRAY

I10 GRAY

I11 GRAY

I12 GRAY

I14 GRAY

I15

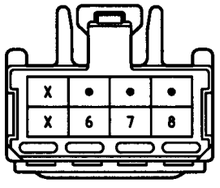

J 2 GRAY

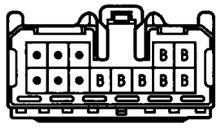

(HINT:SEE PAGE 7,23,39)

J 3 BLACK

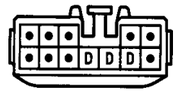

(HINT:SEE PAGE 7,23,39)

J 5 Ⓐ GRAY

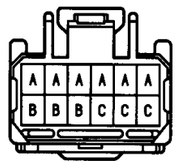

(HINT:SEE PAGE 7,23,39)

J 6 Ⓑ GRAY

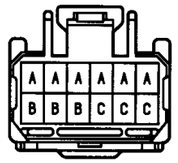

(HINT:SEE PAGE 7,23,39)

J 8

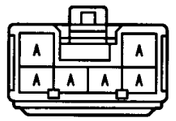

(HINT:SEE PAGE 7,23,39)

J15

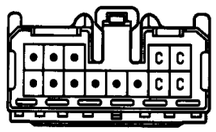

(HINT:SEE PAGE 7,23,39)

J23

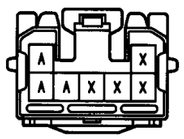

(HINT:SEE PAGE 7,23,39)

J24

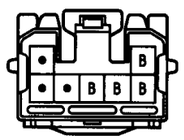

(HINT:SEE PAGE 7,23,39)

J25 ORANGE

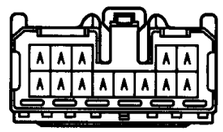

(HINT:SEE PAGE 7,23,39)

J26

(HINT:SEE PAGE 7,23,39)

J27

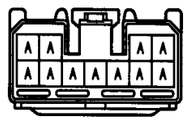

(HINT:SEE PAGE 7,23,39)

J28 Ⓐ

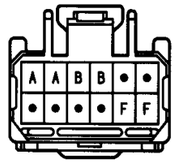

(HINT:SEE PAGE 7,23,39)

J29 Ⓑ

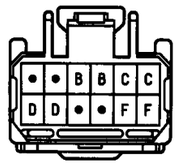

(HINT:SEE PAGE 7,23,39)

J40 GRAY

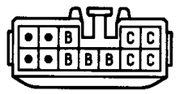

(HINT:SEE PAGE 7,23,39)

J41

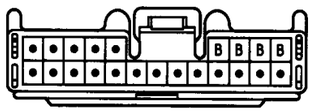

(HINT:SEE PAGE 7,23,39)

J43

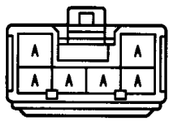

(HINT:SEE PAGE 7,23,39)

K 2 DARK GRAY

K 3 DARK GRAY

K 4 BLACK

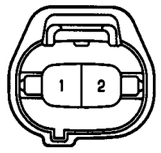

N 1 GRAY

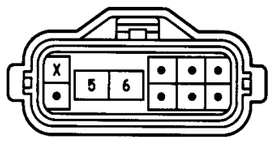

P 1 BLACK

S 1 BLACK

S 7 BLUE

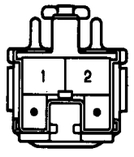

T 1 BLACK

T 4

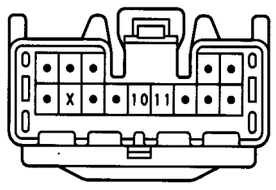

V 2 BLACK

V 3 BROWN

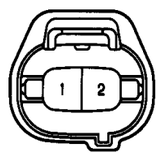

V 4 BROWN

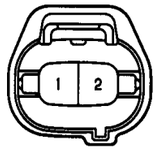

SYSTEM OUTLINE

THIS SYSTEM UTILIZES AN ENGINE AND ECT ECU AND MAINTAINS OVERALL CONTROL OF THE ENGINE, TRANSMISSION AND SO ON. AN OUTLINE OF THE ENGINE CONTROL IS EXPLAINED HERE.

1. INPUT SIGNALS

(1) WATER TEMP. SIGNAL SYSTEM
THE EFI WATER TEMP. SENSOR DETECTS THE WATER TEMP. AND HAS A BUILT-IN THERMISTOR WITH A RESISTANCE WHICH VARIES ACCORDING TO THE WATER TEMP. IS INPUT INTO **TERMINAL THW** OF THE ENGINE ECU (M/T), ENGINE AND ECT ECU (A/T) AS A CONTROL SIGNAL.

(2) INTAKE AIR TEMP. SIGNAL SYSTEM
THE INTAKE AIR TEMP. SENSOR DETECTS THE INTAKE AIR TEMP., WHICH IS INPUT AS A CONTROL SIGNAL INTO **TERMINAL THA** OF THE ENGINE ECU (M/T), ENGINE AND ECT ECU (A/T).

(3) OXYGEN SENSOR SIGNAL SYSTEM
THE OXYGEN DENSITY IN THE EXHAUST EMISSIONS IS DETECTED AND INPUT AS A CONTROL SIGNAL TO **TERMINAL OX1** OF THE ENGINE ECU (M/T), ENGINE AND ECT ECU (A/T).

(4) RPM SIGNAL SYSTEM
CAMSHAFT POSITION AND CRANKSHAFT POSITION ARE DETECTED BY THE CAMSHAFT POSITION SENSOR AND CRANKSHAFT POSITION SENSOR. THE CAMSHAFT POSITION IS INPUT AS A CONTROL SIGNAL TO **TERMINAL G** OF THE ENGINE ECU (M/T), ENGINE AND ECT ECU (A/T) AND THE ENGINE RPM IS INPUT INTO **TERMINAL NE+**.

(5) THROTTLE SIGNAL SYSTEM
THE THROTTLE POSITION SENSOR DETECTS THE THROTTLE VALVE OPENING ANGLE AS A CONTROL SIGNAL, WHICH IS INPUT INTO **TERMINAL VTA** OF THE ENGINE ECU (M/T), ENGINE AND ECT ECU (A/T).

(6) VEHICLE SPEED SIGNAL SYSTEM
THE SPEED SENSOR, INSTALLED INSIDE THE TRANSMISSION DETECTS THE VEHICLE SPEED AND INPUTS A CONTROL SIGNAL INTO **TERMINAL SPD** OF THE ENGINE ECU (M/T), ENGINE AND ECT ECU (A/T).

(7) NEUTRAL START SW SIGNAL SYSTEM
THE NEUTRAL START SW DETECTS WHETHER THE SHIFT POSITION IS IN NEUTRAL, PARKING OR NOT, AND INPUTS A CONTROL SIGNAL INTO **TERMINAL STA** OF THE ENGINE ECU (M/T), ENGINE AND ECT ECU (A/T).

(8) A/C SW SIGNAL SYSTEM
THE OPERATING VOLTAGE OF THE A/C MAGNETIC CLUTCH IS DETECTED AND INPUT IN THE FORM OF A CONTROL SIGNAL TO **TERMINAL ACA** OF THE ENGINE ECU (M/T), ENGINE AND ECT ECU (A/T).

(9) BATTERY SIGNAL SYSTEM
VOLTAGE IS CONSTANTLY APPLIED TO **TERMINAL BATT** OF THE ENGINE ECU (M/T), ENGINE AND ECT ECU (A/T). WHEN THE IGNITION SW IS TURNED ON, VOLTAGE FOR THE ENGINE ECU (M/T), ENGINE AND ECT ECU (A/T) OPERATION IS APPLIED TO **TERMINAL +B** OF THE ENGINE ECU (M/T), ENGINE AND ECT ECU (A/T) VIA THE EFI RELAY.

(10) INTAKE AIR VOLUME SIGNAL SYSTEM
INTAKE AIR VOLUME IS DETECTED BY THE VACUUM SENSOR AND IS INPUT AS A CONTROL SIGNAL TO PIM OF THE ENGINE ECU (M/T), ENGINE AND ECT ECU (A/T).

(11) STARTER SIGNAL SYSTEM
TO CONFIRM WHETHER THE ENGINE IS CRANKIKG, THE VOLTAGE APPLIED TO THE STARTER MOTOR DURING CRANKING IS DETECTED AND THE SIGNAL IS INPUT INTO **TERMINAL NSW** OF THE ENGINE ECU (M/T), ENGINE AND ECT ECU (A/T) AS A CONTROL SIGNAL.

2. CONTROL SYSTEM

- EFI SYSTEM
  THE EFI SYSTEM MONITORS THE ENGINE CONDITION THROUGH THE SIGNALS, WHICH ARE INPUT FROM EACH SENSOR (INPUT SIGNALS (1) TO (12)). THE BEST FUEL INJECTION VOLUME IS DECIDED BASED ON THIS DATA AND THE PROGRAM MEMORIZED BY THE ENGINE ECU (M/T), ENGINE AND ECT ECU (A/T), AND THE CONTROL SIGNAL IS OUTPUT TO **TERMINALS #10** AND **#20** OF THE ENGINE ECU (M/T), ENGINE AND ECT ECU (A/T) TO OPERATE THE INJECTOR (INJECT THE FUEL). THE EFI SYSTEM PRODUCES CONTROL OF FUEL INJECTION OPERATION BY THE ENGINE ECU (M/T), ENGINE AND ECT ECU (A/T) IN RESPONSE TO THE DRIVING CONDITIONS.
- ESA SYSTEM
  THE ESA SYSTEM MONITORS THE ENGINE CONDITION THROUGH THE SIGNALS, WHICH ARE INPUT TO THE ENGINE ECU (M/T), ENGINE AND ECT ECU (A/T) FROM EACH SENSOR (INPUT SIGNALS FROM 1,3,4,6,8). THE BEST IGNITION TIMING IS DECIDED ACCORDING TO THIS DATA AND THE MEMORIZED DATA IN THE ENGINE ECU (M/T), ENGINE AND ECT ECU (A/T) AND THE CONTROL SIGNAL IS OUTPUT TO **TERMINALS IGT1** AND **IGT2**. THIS SIGNAL CONTROLS THE IGNITER TO PROVIDE THE BEST IGNITION TIMING FOR THE DRIVING CONDITIONS.
- ISC SYSTEM
  THE ISC SYSTEM (STEP MOTOR TYPE) INCREASES THE RPM AND PROVIDES IDLE STABILITY FOR FAST IDLE-UP WHEN THE ENGINE IS COLD, AND WHEN THE IDLE SPEED HAS DROPPED DUE TO ELECTRICAL LOAD AND SO ON. THE ENGINE ECU (M/T), ENGINE AND ECT ECU (A/T) EVALUATES THE SIGNALS FROM EACH SENSOR (INPUT SIGNALS FROM 1,4,5,8,9), CURRENT IS OUTPUT TO **TERMINALS ISCC** AND **ISCO** TO CONTROL ISC VALVE.
- EGR CONTROL SYSTEM
  THE EGR CONTROL SYSTEM DETECTS THE SIGNAL FROM EACH SENSOR (INPUT SIGNALS FROM 1,4,9,10), CURRENT IS OUTPUT TO **TERMINAL EGR** TO CONTROL THE EGR VALVE.

3. DIAGNOSIS SYSTEM

WITH THE DIAGNOSIS SYSTEM, WHEN THERE IS A MALFUNCTIONING IN THE ENGINE ECU SIGNAL SYSTEM, THE MALFUNCTION SYSTEM IS RECORDED IN THE MEMORY THE MALFUNCTIONING SYSTEM CAN THEN BE FOUND BY READING THE DISPLAY (CODE) OF THE CHECK ENGINE WARNING LIGHT.

4. FAIL-SAFE SYSTEM

WHEN A MALFUNCTION OCCURS IN ANY SYSTEMS, IF THERE IS A POSSIBILITY OF ENGINE TROUBLE BEING CAUSED BY CONTINUED CONTROL BASED ON THE SIGNALS FROM THAT SYSTEM, THE FAIL-SAFE SYSTEM EITHER CONTROLS THE SYSTEM BY USING DATA (STANDARD VALUES) RECORDED IN THE ENGINE ECU (M/T), ENGINE AND ECT ECU (A/T) MEMORY OR ELSE STOPS THE ENGINE.

ENGINE CONTROL(5S-FE LHD)

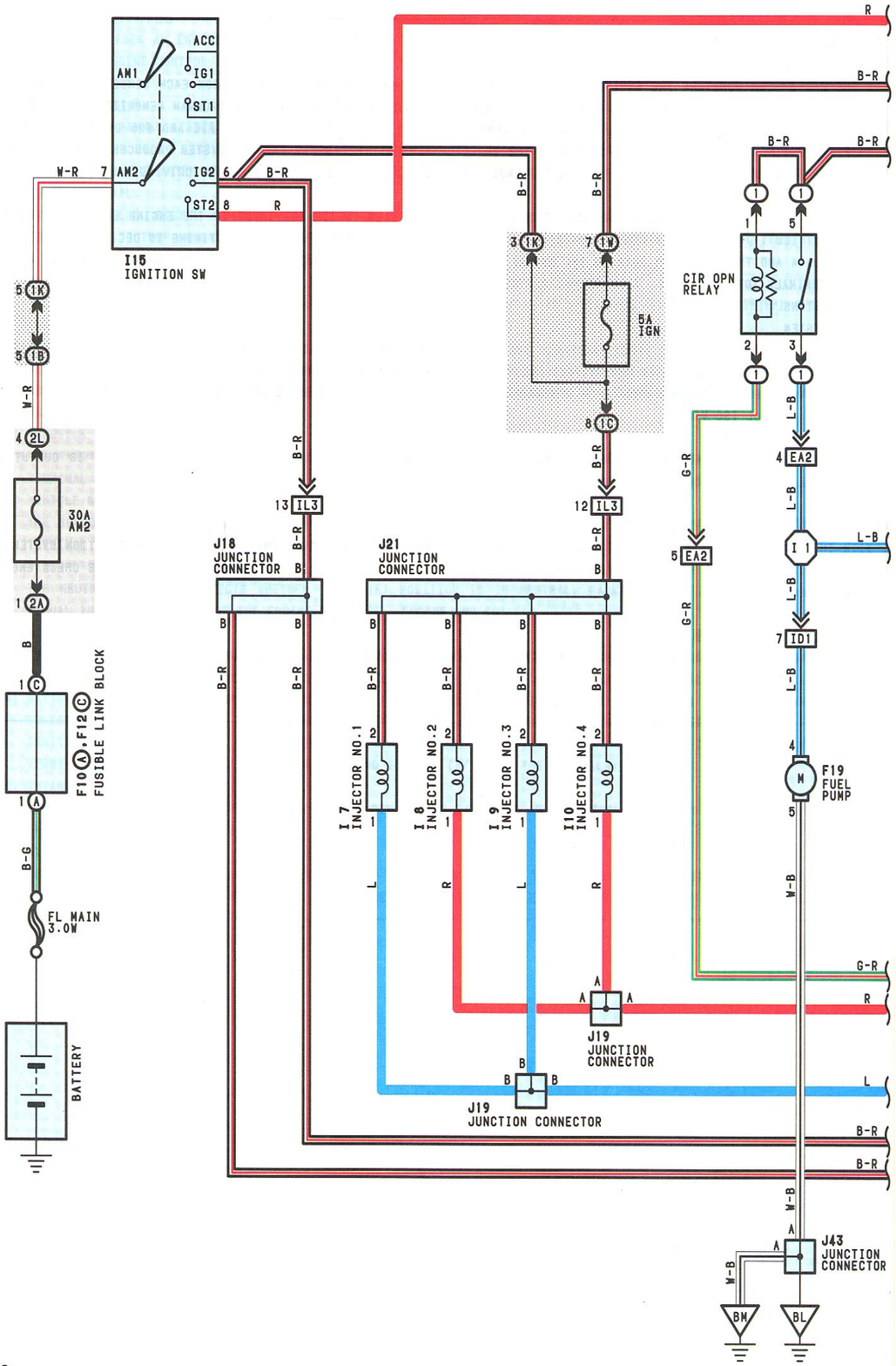

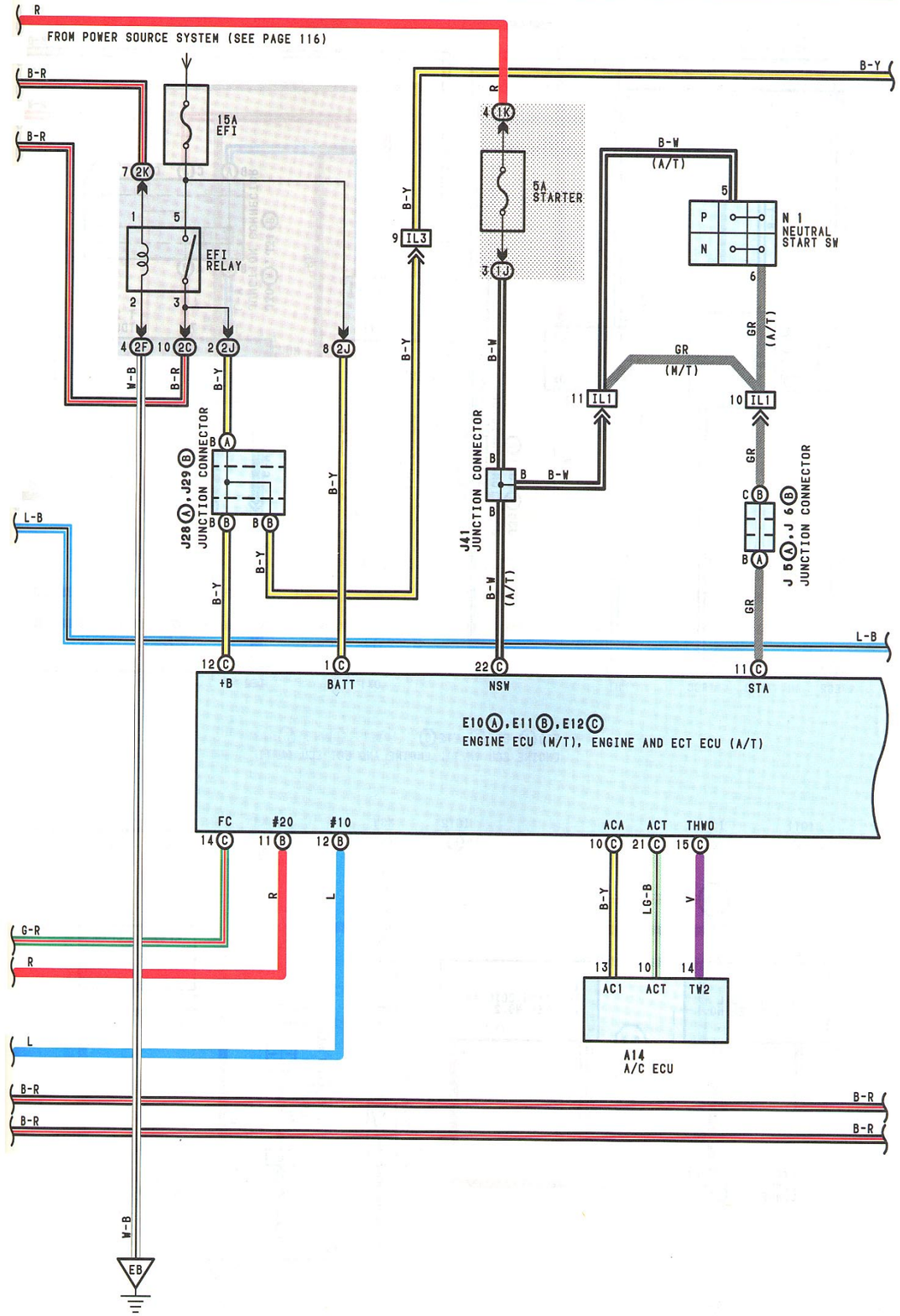

ENGINE CONTROL(5S-FE LHD)

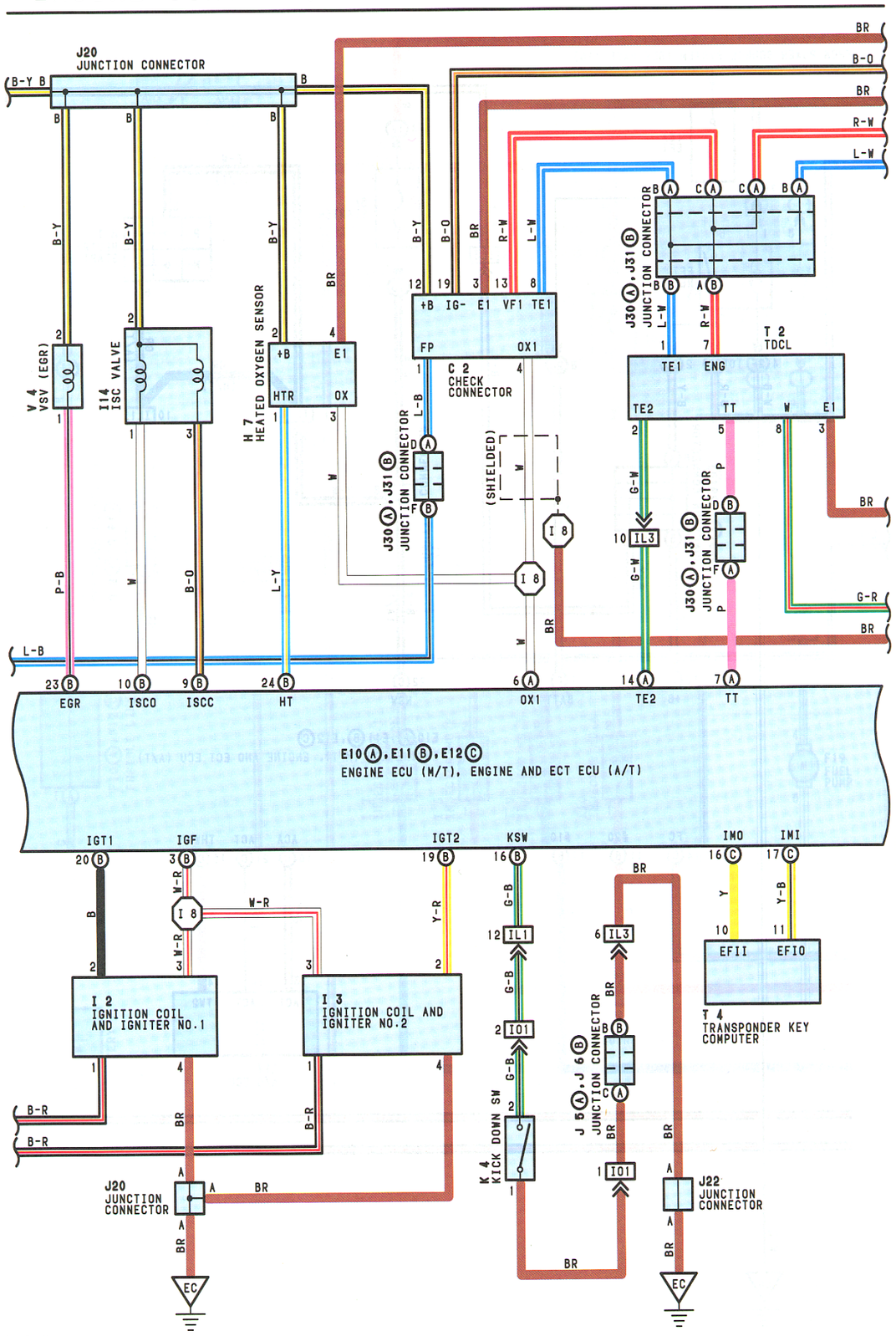

* 1:LEADED GASOLINE

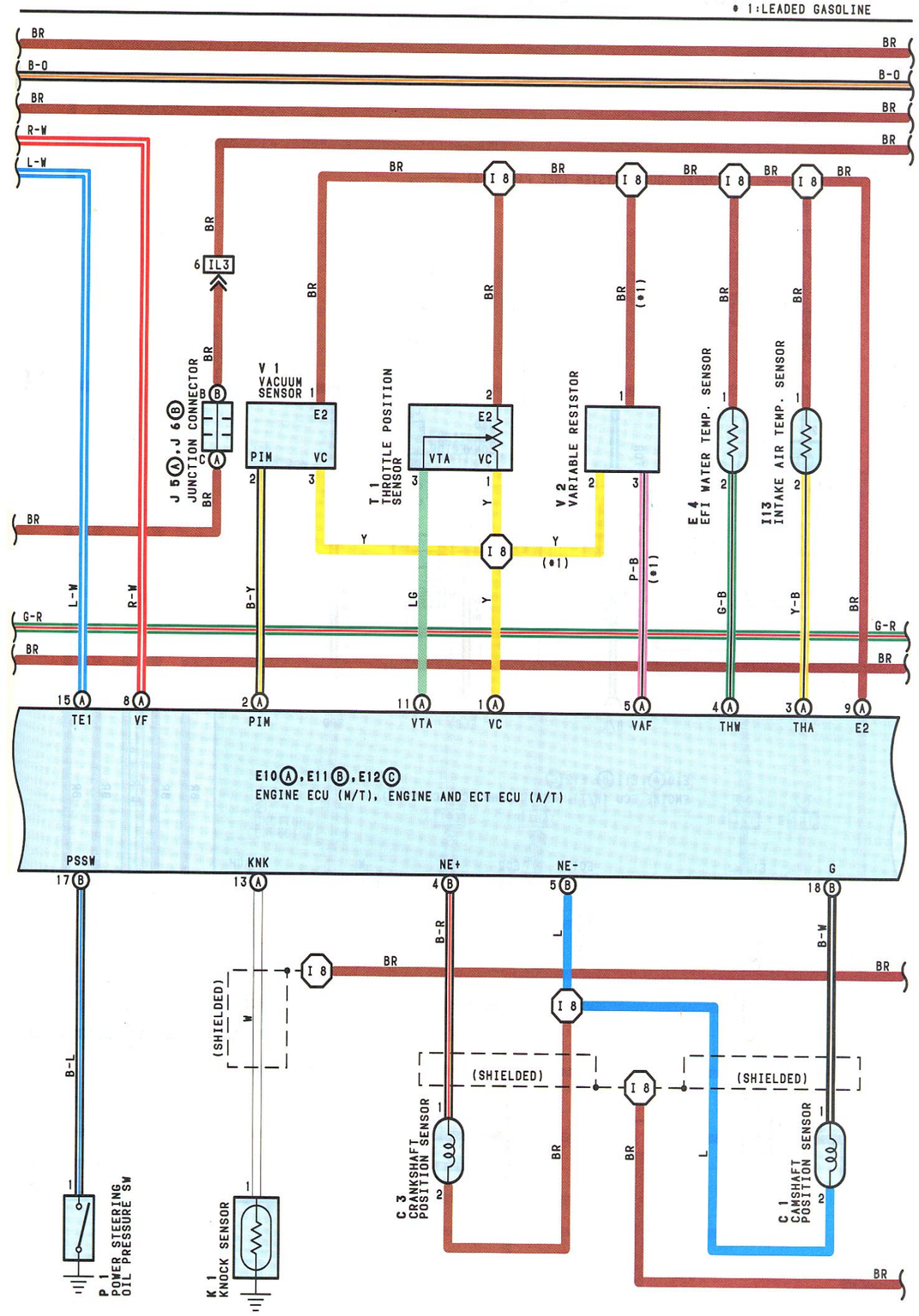

ENGINE CONTROL(5S-FE LHD)

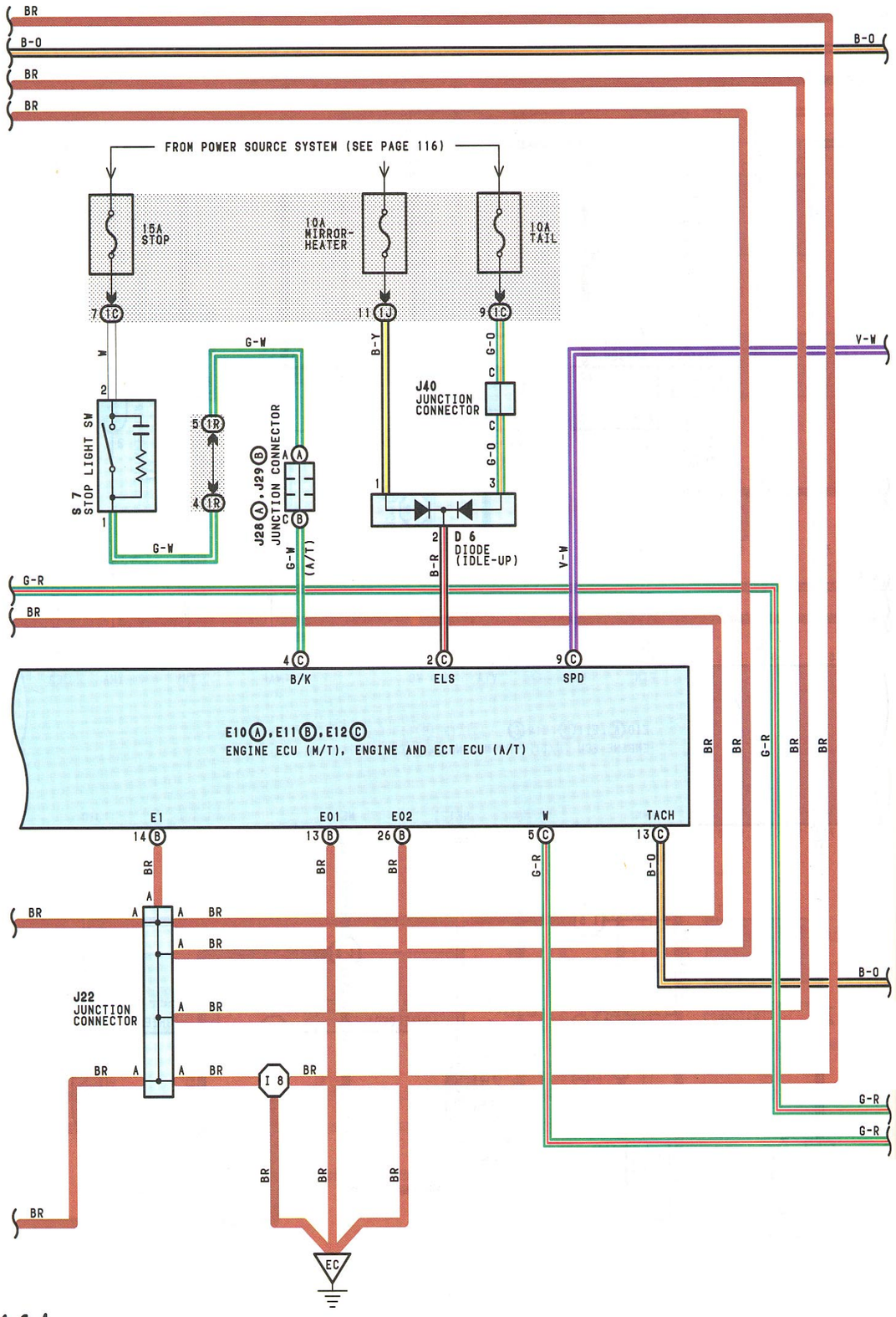

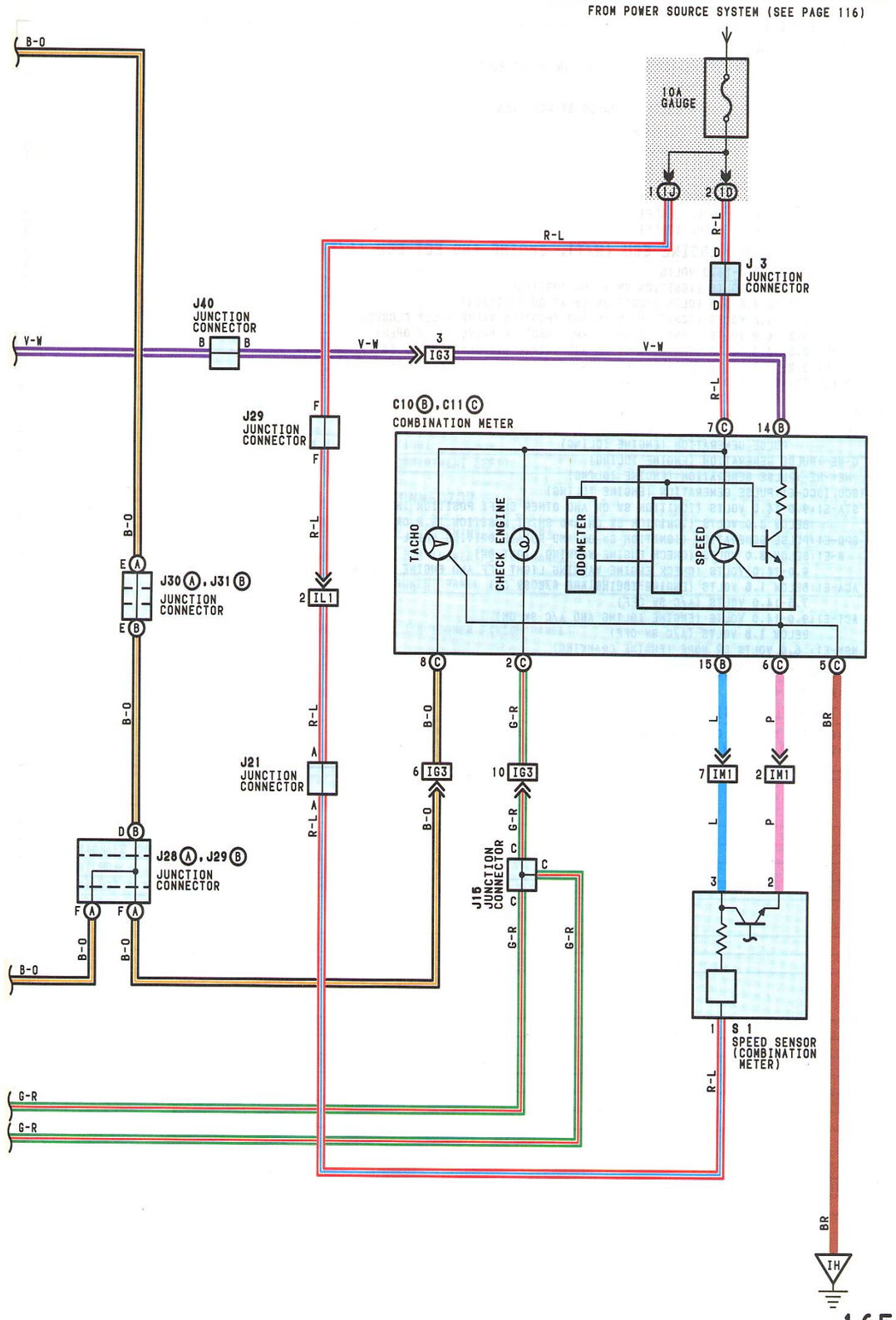

ENGINE CONTROL(5S-FE LHD)

SERVICE HINTS

CIR OPN RELAY

(1) 3-(1) 5:CLOSED WITH THE IGNITION SW AT ON OR ST POSITION

EFI RELAY

5-3:CLOSED WITH THE IGNTIION SW AT ON OR ST POSITION

E 4 EFI WATER TEMP. SENSOR

1-2:10.0 -20.0 KΩ (-20°C, -4°F)
4.0 - 7.0 KΩ (0°C, 32°F)
2.0 - 3.0 KΩ (20°C, 68°F)
0.9 - 1.3 KΩ (40°C, 104°F)
0.4 - 0.7 KΩ (60°C, 140°F)
0.2 - 0.4 KΩ (80°C, 176°F)

E 6(A),E 7(B),E 8(C) ENGINE ECU (M/T), ENGINE AND ECT ECU (A/T)

BATT-E1:ALWAYS 9.0-14.0 VOLTS
+B-E1:9.0-14.0 VOLTS (IGNITION SW AT ON POSITION)
VC-E1:ALWAYS 4.5-5.5 VOLTS (IGNITION SW AT ON POSITION)
VTA-E1:0.3- 0.8 VOLTS (IGNITION SW ON AND THROTTLE VALVE FULLY CLOSED)
3.2- 4.9 VOLTS (IGNITION SW ON AND THROTTLE VALVE FULLY OPEN)
THA-E1:0.5- 3.4 VOLTS (IGNITION SW ON AND INTAKE AIR TEMP. 20°C, 68°F)
THW-E1:0.2- 1.0 VOLTS (ENGINE IDLING AND COOLANT TEMP. 80°C, 176°F)
#10,#20-E01:9.0-14.0 VOLTS (IGNITION SW AT ON POSITION)
PULSE GENERATION (ENGINE IDLING)
IGT1,IGT2-E1:PULSE GENERATION (ENGINE IDLING)
IGF-E1: 4.5-5.5 VOLTS (IGNITION SW AT ON POSITION)
PULSE GENERATION (ENGINE IDLING)
G-NE-:PULSE GENERATION (ENGINE IDLING)
NE+-NE-:PULSE GENERATION (ENGINE IDLING)
ISCO,ISCC-E1:PULSE GENERATION (ENGINE IDLING)
STA-E1:9.0-14.0 VOLTS (IGNITION SW ON AND OTHER SHIFT POSITION IN P OR N POSITION)
BELOW 3.0 VOLTS (IGNITION SW ON AND SHIFT POSITION IN P OR N POSITION)
SPD-E1:PULSE GENERATION (IGNITION SW ON AND ROTATE DRIVING WHEEL SLOWLY)
W-E1:BELOW 3.0 VOLTS (CHECK ENGINE WARNING LIGHT ON)
9.0-14.0 VOLTS (CHECK ENGINE WARNING LIGHT OFF AND ENGINE RUNNING)
ACA-E1:BELOW 1.5 VOLTS (ENGINE IDLING AND A/C SW ON)
7.5-14.0 VOLTS (A/C SW OFF)
ACT-E1:9.0-14.0 VOLTS (ENGINE IDLING AND A/C SW ON)
BELOW 1.5 VOLTS (A/C SW OFF)
NSW-E1: 6.0 VOLTS OR MORE (ENGINE CRANKING)

I 7,I 8,I 9,I10 INJECTOR

2-1:APPROX. 13.8 Ω

T 1 THROTTLE POSITION SENSOR

1-2:0.2-5.7 KΩ WITH CLEARANCE BETWEEN LEVER AND STOP SCREW 0 MM (0 IN.)
1-3:2.0-10.2 KΩ WITH THROTTLE VALVE FULLY OPEN

○ : PARTS LOCATION

CODE	SEE PAGE	CODE	SEE PAGE	CODE	SEE PAGE
A14	64(LHD)	I 8	62(5S-FE LHD)	J31 B	66(LHD)
C 1	62(5S-FE LHD)	I 9	62(5S-FE LHD)	J40	66(LHD)
C 2	62(5S-FE LHD)	I10	62(5S-FE LHD)	J41	66(LHD)
C 3	62(5S-FE LHD)	I13	62(5S-FE LHD)	J43	68(LHD)
C10 B	64(LHD)	I14	62(5S-FE LHD)	K 1	62(5S-FE LHD)
C11 C	64(LHD)	I15	64(LHD)	K 4	66(LHD)
D 6	64(LHD)	J 3	66(LHD)	N 1	62(5S-FE LHD)
E 4	62(5S-FE LHD)	J 5 A	66(LHD)	P 1	62(5S-FE LHD)
E10 A	64(5S-FE LHD)	J 6 B	66(LHD)	S 1	62(5S-FE LHD)
E11 B	64(5S-FE LHD)	J15	66(LHD)	S 7	66(LHD)
E12 C	64(5S-FE LHD)	J18	66(LHD)	T 1	62(5S-FE LHD)
F10 A	62(5S-FE LHD)	J19	66(LHD)	T 2	66(LHD)
F12 C	62(5S-FE LHD)	J20	66(LHD)	T 4	66(LHD)
F19	68(LHD)	J21	66(LHD)	V 1	62(5S-FE LHD)
H 7	62(5S-FE LHD)	J22	66(LHD)	V 2	62(5S-FE LHD)
I 2	62(5S-FE LHD)	J28 A	66(LHD)	V 4	62(5S-FE LHD)
I 3	62(5S-FE LHD)	J29 B	66(LHD)		
I 7	62(5S-FE LHD)	J30 A	66(LHD)		

: RELAY BLOCKS

CODE	SEE PAGE	RELAY BLOCKS (RELAY BLOCK LOCATION)
1	58	ENGINE ROOM R/B NO.1 (ENGINE COMPARTMENT LEFT)

: JUNCTION BLOCK AND WIRE HARNESS CONNECTOR

CODE	SEE PAGE	JUNCTION BLOCK AND WIRE HARNESS (CONNECTOR LOCATION)
1B	52(LHD)	COWL WIRE AND INSTRUMENT PANEL J/B (LOWER FINISH PANEL)
1C		
1D	52(LHD)	INSTRUMENT PANEL WIRE AND INSTRUMENT PANEL J/B (LOWER FINISH PANEL)
1J	52(LHD)	COWL WIRE AND INSTRUMENT PANEL J/B (LOWER FINISH PANEL)
1K		
1R		
1W		
2A	56	ENGINE ROOM MAIN WIRE AND ENGINE ROOM J/B NO.2 (ENGINE COMPARTMENT LEFT)
2C		
2F		
2J	56	COWL WIRE AND ENGINE ROOM J/B NO.2 (ENGINE COMPARTMENT LEFT)
2K		
2L	56(LHD)	

: CONNECTOR JOINING WIRE HARNESS AND WIRE HARNESS

CODE	SEE PAGE	JOINING WIRE HARNESS AND WIRE HARNESS (CONNECTOR LOCATION)
EA2	84(5S-FE LHD)	COWL WIRE AND ENGINE ROOM MAIN WIRE (UNDER THE ENGINE ROOM J/B NO.2)
ID1	86(LHD)	FLOOR WIRE AND COWL WIRE (LEFT KICK PANEL)
IG3	86(LHD)	INSTRUMENT PANEL WIRE AND COWL WIRE (UNDER THE BLOWER MOTOR)
IL1	88(LHD)	ENGINE WIRE AND COWL WIRE (UNDER THE BLOWER MOTOR)
IL3		
IM1	88(LHD)	ENGINE WIRE AND INSTRUMENT PANEL WIRE (UNDER THE BLOWER MOTOR)
IO1	88(LHD)	COWL WIRE AND SWITCH WIRE (INSTRUMENT PANEL BRACE LH)

: GROUND POINTS

CODE	SEE PAGE	GROUND POINTS LOCATION
EB	84(5S-FE LHD)	BEHIND HEADLIGHT LH
EC	84(5S-FE LHD)	BEHIND INTAKE MANIFOLD
IH	86(LHD)	INSTRUMENT PANEL BRACE RH
BL	90(LHD)	UNDER THE LEFT CENTER PILLAR
BM	90(LHD)	BACK PANEL CENTER

: SPLICE POINTS

CODE	SEE PAGE	WIRE HARNESS WITH SPLICE POINTS	CODE	SEE PAGE	WIRE HARNESS WITH SPLICE POINTS
I 1	88(LHD)	COWL WIRE	I 8	88(LHD)	ENGINE WIRE

ENGINE CONTROL(5S-FE LHD)

A14

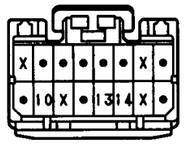

C 1 DARK GRAY

C 2 BLACK

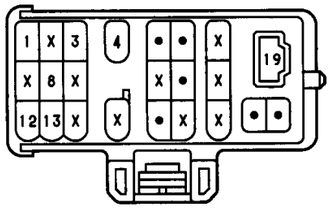

C 3 DARK GRAY

C10 (B)

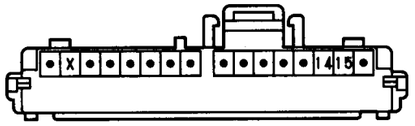

C11 (C) BROWN

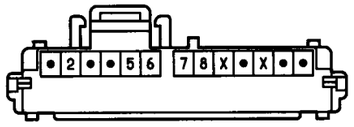

D 6 ORANGE

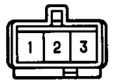

E 4 GREEN

E10 (A)

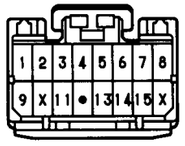

E11 (B)

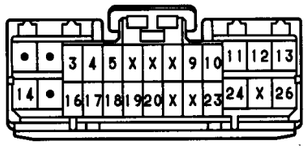

E12 (C)

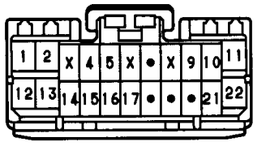

F10 (A)

F12 (C)

F19

H 7 DARK GRAY

I 2 BLACK

I 3 BLACK

I 7 BROWN

I 8 GRAY

I 9 BROWN

I10 GRAY

I13 BLACK

I14 GRAY

I15

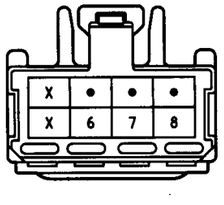

J 3 BLACK

(HINT:SEE PAGE 7,23,39)

J 5 (A) GRAY

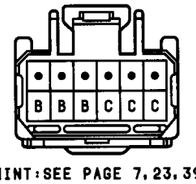

(HINT:SEE PAGE 7,23,39)

J 6 (B) GRAY

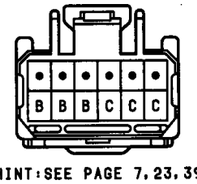

(HINT:SEE PAGE 7,23,39)

ENGINE IMMOBILISER SYSTEM(LHD)

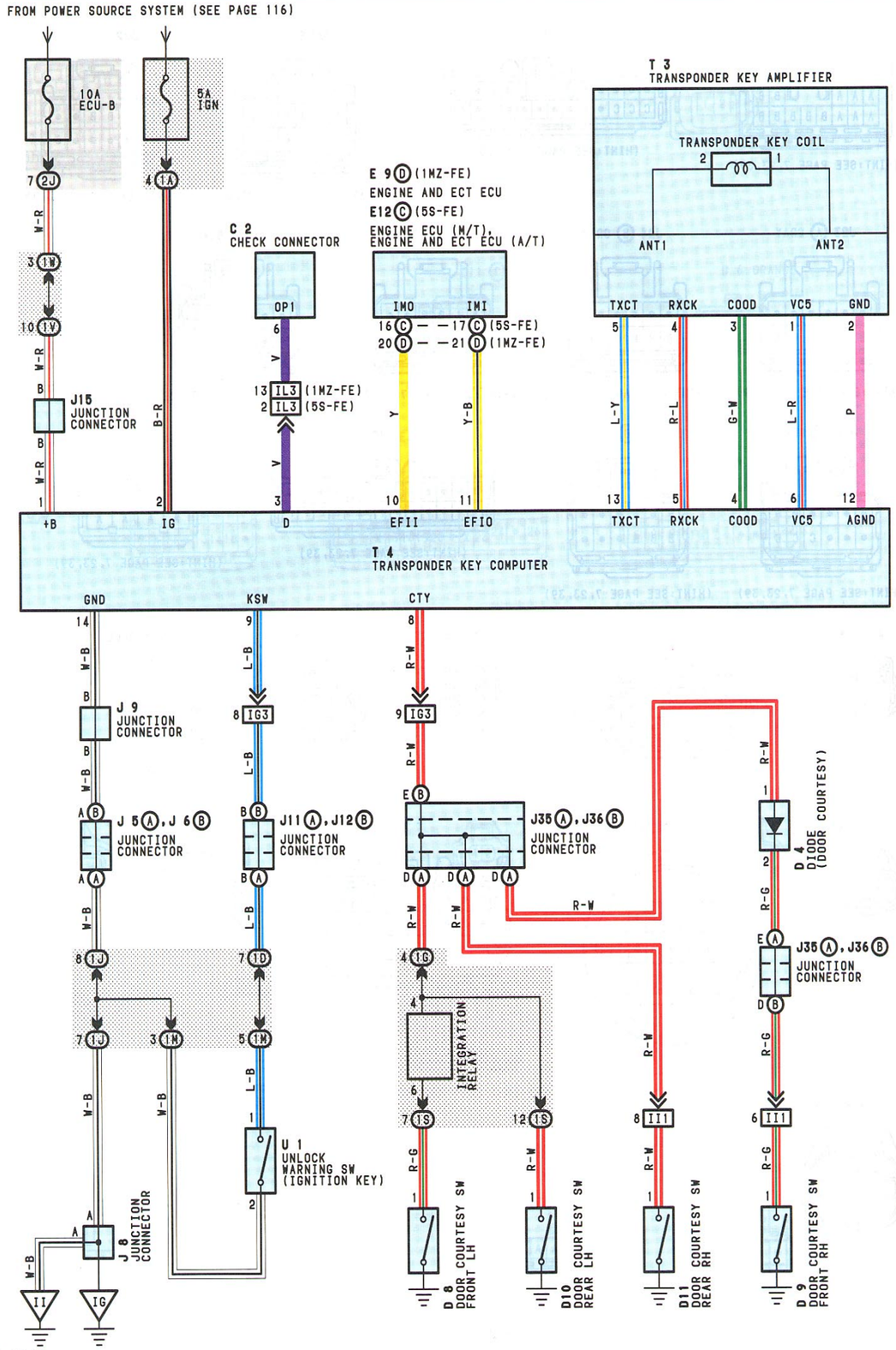

SERVICE HINTS

T 4 TRANSPONDER KEY COMPUTER

1-GROUND : ALWAYS APPROX. 12 VOLTS
2-GROUND : APPROX. 12 VOLTS WITH THE IGNITION SW AT ON POSITION
8-GROUND : CONTINUITY WITH THE DOOR OPENED
9-GROUND : CONTINUITY WITH THE IGNITION KEY IN CYLINDER
14-GROUND : ALWAYS CONTINUITY

○ : PARTS LOCATION

CODE	SEE PAGE	CODE		SEE PAGE	CODE		SEE PAGE
C 2	60(1MZ-FE LHD)	E 9	D	64(1MZ-FE LHD)	J12	B	66(LHD)
	62(5S-FE LHD)	E12	C	64(5S-FE LHD)	J15		66(LHD)
D 4	64(LHD)	J 5	A	66(LHD)	J35	A	66(LHD)
D 8	68(LHD)	J 6	B	66(LHD)	J36	B	66(LHD)
D 9	68(LHD)	J 8		66(LHD)	T 3		66(LHD)
D10	68(LHD)	J 9		66(LHD)	T 4		66(LHD)
D11	68(LHD)	J11	A	66(LHD)	U 1		66(LHD)

⬭ : JUNCTION BLOCK AND WIRE HARNESS CONNECTOR

CODE	SEE PAGE	JUNCTION BLOCK AND WIRE HARNESS (CONNECTOR LOCATION)
1A	52(LHD)	COWL WIRE AND INSTRUMENT PANEL J/B (LOWER FINISH PANEL)
1D 1G	52(LHD)	INSTRUMENT PANEL WIRE AND INSTRUMENT PANEL J/B (LOWER FINISH PANEL)
1J 1M	52(LHD)	COWL WIRE AND INSTRUMENT PANEL J/B (LOWER FINISH PANEL)
1S	52(LHD)	FLOOR WIRE AND INSTRUMENT PANEL J/B (LOWER FINISH PANEL)
1V 1W	52(LHD)	COWL WIRE AND INSTRUMENT PANEL J/B (LOWER FINISH PANEL)
2J	56	COWL WIRE AND ENGINE ROOM J/B NO.2 (ENGINE COMPARTMENT LEFT)

□ : CONNECTOR JOINING WIRE HARNESS AND WIRE HARNESS

CODE	SEE PAGE	JOINING WIRE HARNESS AND WIRE HARNESS (CONNECTOR LOCATION)
IG3	86(LHD)	INSTRUMENT PANEL WIRE AND COWL WIRE (UNDER THE BLOWER MOTOR)
II1	88(LHD)	FLOOR NO.2 WIRE AND INSTRUMENT PANEL WIRE (RIGHT KICK PANEL)
IL3	88(LHD)	ENGINE WIRE AND COWL WIRE (UNDER THE BLOWER MOTOR)

▽ : GROUND POINTS

CODE	SEE PAGE	GROUND POINTS LOCATION
IG	86(LHD)	INSTRUMENT PANEL BRACE LH
II	86(LHD)	COWL SIDE PANEL RH

ENGINE IMMOBILISER SYSTEM(LHD)

(1MZ-FE) C 2 BLACK

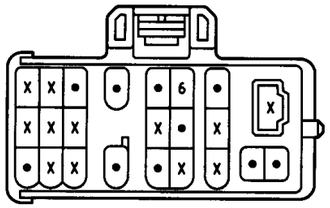

(5S-FE) C 2 BLACK

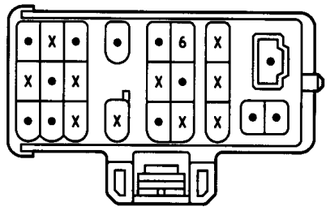

D 4 BLACK

D 8

D 9

D10

D11

(1MZ-FE) E 9 Ⓓ

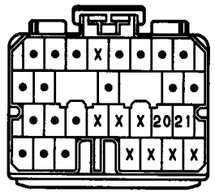

(5S-FE) E12 Ⓒ

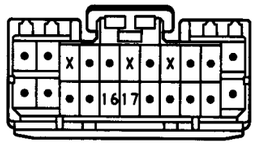

J 5 Ⓐ GRAY

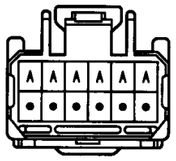

(HINT:SEE PAGE 7,23,39)

J 6 Ⓑ GRAY

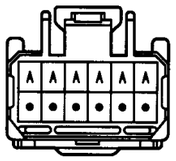

(HINT:SEE PAGE 7,23,39)

J 8

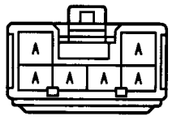

(HINT:SEE PAGE 7,23,39)

J 9

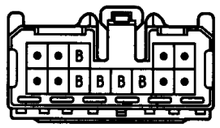

(HINT:SEE PAGE 7,23,39)

J11 Ⓐ BLACK

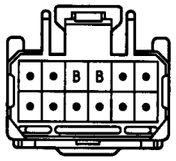

(HINT:SEE PAGE 7,23,39)

J12 Ⓑ BLACK

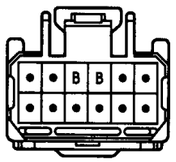

(HINT:SEE PAGE 7,23,39)

J15

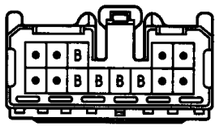

(HINT:SEE PAGE 7,23,39)

J35 Ⓐ BLACK

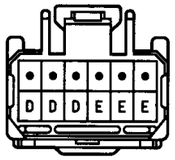

(HINT:SEE PAGE 7,23,39)

J36 Ⓑ BLACK

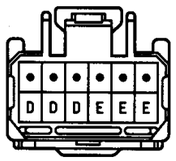

(HINT:SEE PAGE 7,23,39)

T 3

T 4

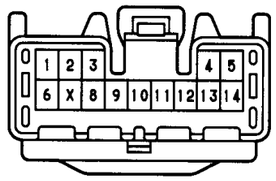

U 1

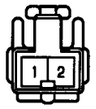

HEADLIGHT(w/ DAYTIME RUNNING LIGHT LHD)

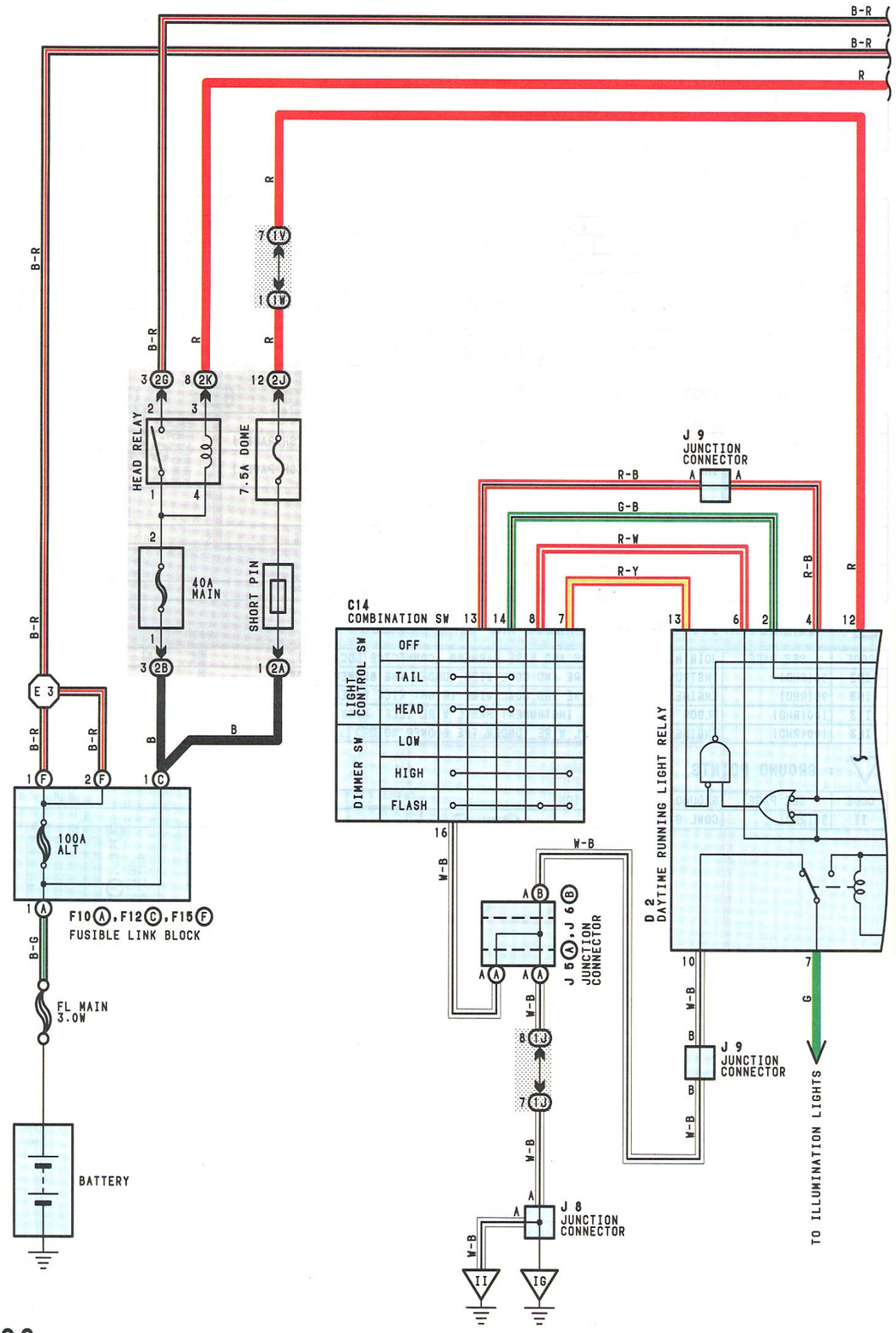

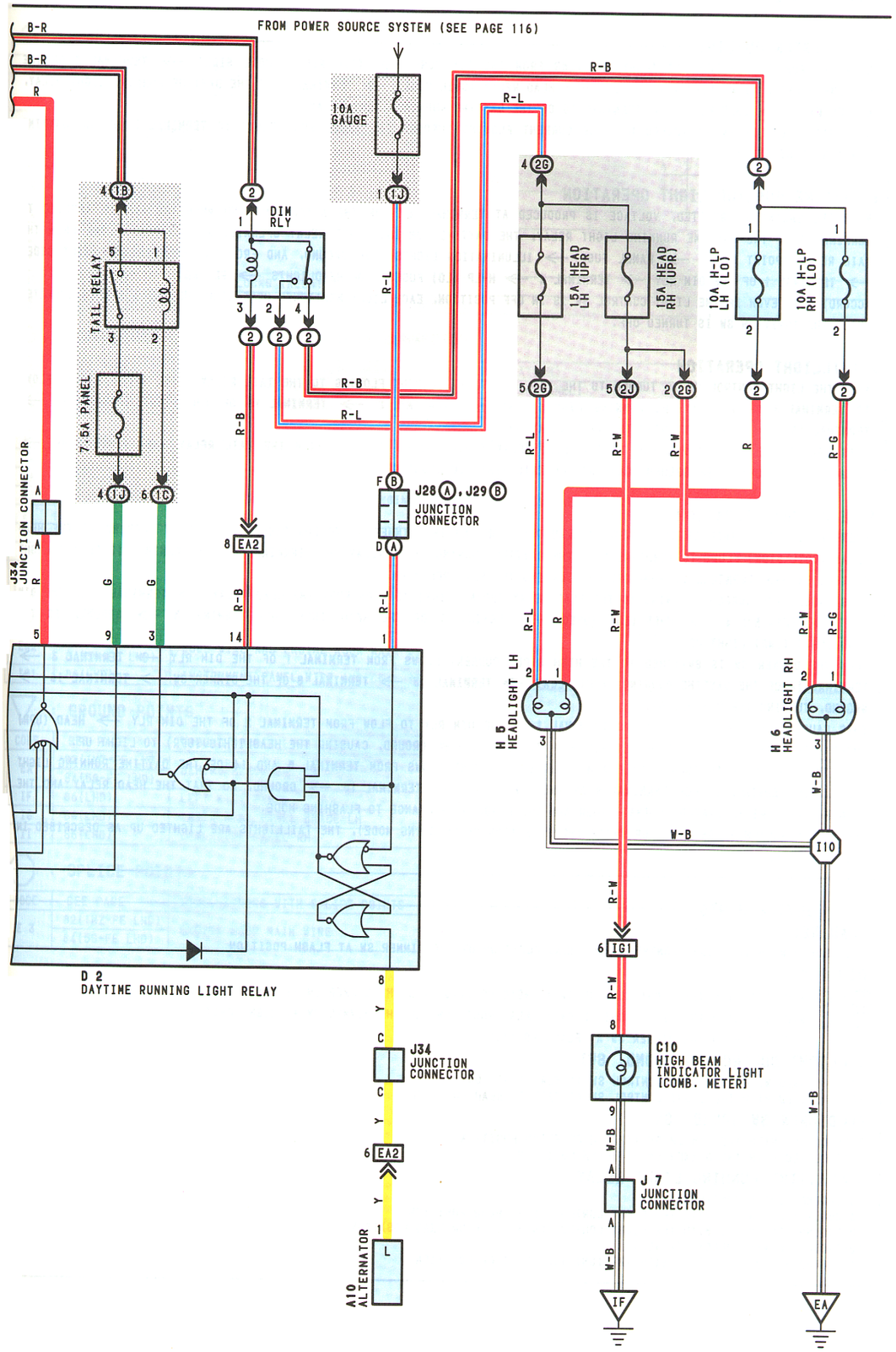

HEADLIGHT(w/ DAYTIME RUNNING LIGHT LHD)

SYSTEM OUTLINE

CURRENT FROM THE BATTERY IS ALWAYS FLOWING FROM THE **ALT** FUSE → TAIL RELAY (COIL SIDE) → **TERMINAL 3** OF THE DAYTIME RUNNING LIGHT RELAY, **MAIN** FUSE → HEAD RELAY (COIL SIDE) → **TERMINAL 5** OF THE DAYTIME RUNNING LIGHT RELAY, AND **FL MAIN** → **DOME** FUSE → **TERMINAL 12** OF THE DAYTIME RUNNING LIGHT RELAY.
WHEN THE IGNITION SW IS TURNED ON, THE CURRENT FLOWING THROUGH THE **GAUGE** FUSE FLOWS TO **TERMINAL 1** OF THE DAYTIME RUNNING LIGHT RELAY.

1.DAYTIME RUNNING LIGHT OPERATION

WHEN THE ENGINE IS STARTED, VOLTAGE IS PRODUCED AT **TERMINAL 'L'** OF THE ALTERNATOR AND WHEN VOLTAGE IS APPLIED TO **TERMINAL 8** OF THE DAYTIME RUNNING LIGHT RELAY, THE DAYTIME RUNNING LIGHT RELAY OPERATES AND CURRENT FLOWS FROM THE TAIL RELAY (POINT SIDE) → **PANEL** FUSE → ILLUMINATION LIGHTS → **GROUND**, AND FROM THE HEAD RELAY (POINT SIDE) → **TERMINAL 1** OF THE DIM RLY → **TERMINAL 4** → **H-LP (LO)** FUSES → HEADLIGHTS → **GROUND**.
ACCORDINGLY, EVEN IF THE LIGHT CONTROL SW IS IN **OFF** POSITION, EACH LIGHT MENTIONED HERE LIGHT UP. THIS SYSTEM OPERATES UNTIL THE IGNITION SW IS TURNED OFF.

2.TAILLIGHT OPERATION

WHEN THE LIGHT CONTROL SW IS TURNED TO THE **TAIL** POSITION, CURRENT FLOWING TO THE TAIL RELAY (COIL SIDE) ALWAYS FLOWS TO **TERMINAL 3** OF THE DAYTIME RUNNING LIGHT RELAY → **TERMINAL 2** → **TERMINAL 15** OF THE LIGHT CONTROL SW → **TERMINAL 16** → **GROUND**, TURNING THE TAIL RELAY ON.
THIS CAUSES THE CURRENT FLOWING TO THE TAIL RELAY (POINT SIDE) TO FLOW FROM THE TAIL RELAY → **PANEL** FUSE → ILLUMINATION LIGHTS → **GROUND**, CAUSING THE TAILLIGHTS TO LIGHT UP.

3.HEADLIGHT OPERATION

WHEN THE LIGHT CONTROL SW IS TURNED TO **HEAD** POSITION AND THE DIMMER SW TO LOW SIDE, THE CURRENT FLOWING TO THE HEAD RELAY (COIL SIDE) FLOWS TO **TERMINAL 5** OF THE DAYTIME RUNNING LIGHT RELAY → **TERMINAL 4** → **TERMINAL 13** OF THE LIGHT CONTROL SW → **TERMINAL 16** → **GROUND**, TURNING THE HEAD RELAY ON.
THIS CAUSES THE CURRENT FLOWING TO THE HEAD RELAY (POINT SIDE) TO FLOW FROM THE HEAD RELAY → **TERMINAL 1** OF THE DIM RLY → **TERMINAL 4** → **H-LP (LO)** FUSES → **TERMINAL 1** OF THE HEADLIGHTS → **TERMINAL 3** → **GROUND**, SO THE HEADLIGHTS (LWR) LIGHT UP.
WHEN THE DIMMER SW IS SWITCHED TO THE HIGH SIDE, CURRENT FLOWS FROM **TERMINAL 1** OF THE DIM RLY → **TERMINAL 3** → **TERMINAL 14** OF THE DAYTIME RUNNING LIGHT RELAY → **TERMINAL 13** → **TERMINAL 8** OF THE DIMMER SW → **TERMINAL 16** → **GROUND**, TURNING THE DIM RLY ON.
THIS CAUSES THE CURRENT FLOWING TO **TERMINAL 1** OF THE DIM RLY TO FLOW FROM **TERMINAL 2** OF THE DIM RLY → **HEAD (UPR)** FUSES → **TERMINAL 2** OF THE HEADLIGHTS → **TERMINAL 3** → **GROUND**, CAUSING THE HEADLIGHTS (UPR) TO LIGHT UP.
WHEN THE DIMMER SW IS TURNED TO **FLASH** POSITION, CURRENT FLOWS FROM **TERMINAL 5** AND **14** OF THE DAYTIME RUNNING LIGHT RELAY → **TERMINAL 6** → **TERMINAL 9** OF THE DIMMER SW → **TERMINAL 16** → **GROUND**, SO THAT THE HEAD RELAY AND THE DIMMER RELAY ARE ACTIVATED IN THAT ORDER ARE THE HEADLIGHTS CHANGE TO FLASHING MODE.
WHEN THE HEADLIGHTS ARE LIGHT UP (WITH THE EXCEPTION OF FLASHING MODE), THE TAILLIGHTS ARE LIGHTED UP AS DESCRIBED IN PART **2** EARLIER.

SERVICE HINTS

HEAD RELAY

1-2:CLOSED WITH THE LIGHT CONTROL SW AT **HEAD** POSITION OR THE DIMMER SW AT **FLASH** POSITION

DIM RLY

(2)1-(2)4:CLOSED WITH THE LIGHT CONTROL SW AT **HEAD** POSITION AND THE DIMMER SW AT **LOW** POSITION
(2)1-(2)2:CLOSED WITH THE LIGHT CONTROL SW AT **HEAD** POSITION AND THE DIMMER SW AT **HIGH** POSITION
CLOSED WITH THE DIMMER SW AT **FLASH** POSITION

C14 LIGHT CONTROL SW [COMB. SW]

13-16:CLOSED WITH THE LIGHT CONTROL SW AT **HEAD** POSITION
14-16:CLOSED WITH THE LIGHT CONTROL SW AT **TAIL** OR **HEAD** POSITION

C14 DIMMER SW [COMB. SW]

7-16:CLOSED WITH THE DIMMER SW AT **HIGH** OR **FLASH** POSITION
8-16:CLOSED WITH THE DIMMER SW AT **FLASH** POSITION

D 2 DAYTIME RUNNING LIGHT RELAY

10-GROUND:ALWAYS CONTINUITY
4-GROUND:CONTINUITY WITH THE LIGHT CONTROL SW AT **HEAD** POSITION
2-GROUND:CONTINUITY WITH THE LIGHT CONTROL SW AT **TAIL** OR **HEAD** POSITION
12-GROUND:ALWAYS APPROX. **12** VOLTS
1-GROUND:APPROX. **12** VOLTS WITH THE IGNITION SW AT **ON** POSITION

○ : PARTS LOCATION

CODE		SEE PAGE	CODE		SEE PAGE	CODE		SEE PAGE
A10		60(1MZ-FE LHD)	F12	C	62(5S-FE LHD)	J 6	B	66(LHD)
		62(5S-FE LHD)	F15	F	60(1MZ-FE LHD)	J 7		66(LHD)
C10		64(LHD)			62(5S-FE LHD)	J 8		66(LHD)
C14		64(LHD)	H 5		60(1MZ-FE LHD)	J 9		66(LHD)
D 2		64(LHD)			62(5S-FE LHD)	J28	A	66(LHD)
F10	A	60(1MZ-FE LHD)	H 6		60(1MZ-FE LHD)	J29	B	66(LHD)
		62(5S-FE LHD)			62(5S-FE LHD)	J34		66(LHD)
F12	C	60(1MZ-FE LHD)	J 5	A	66(LHD)			

○ : RELAY BLOCKS

CODE	SEE PAGE	RELAY BLOCKS (RELAY BLOCK LOCATION)
2	59(LHD)	ENGINE ROOM R/B NO.2 (NEAR THE BATTERY)

○ : JUNCTION BLOCK AND WIRE HARNESS CONNECTOR

CODE	SEE PAGE	JUNCTION BLOCK AND WIRE HARNESS (CONNECTOR LOCATION)
1B	52(LHD)	COWL WIRE AND INSTRUMENT PANEL J/B (LOWER FINISH PANEL)
1D	52(LHD)	INSTRUMENT PANEL WIRE AND INSTRUMENT PANEL J/B (LOWER FINISH PANEL)
1J	52(LHD)	COWL WIRE AND INSTRUMENT PANEL J/B (LOWER FINISH PANEL)
1V		
1W		
2A	56	ENGINE ROOM MAIN WIRE AND ENGINE ROOM J/B NO.2 (ENGINE COMPARTMENT LEFT)
2B		
2G		
2J	56	COWL WIRE AND ENGINE ROOM J/B NO.2 (ENGINE COMPARTMENT LEFT)
2K		

□ : CONNECTOR JOINING WIRE HARNESS AND WIRE HARNESS

CODE	SEE PAGE	JOINING WIRE HARNESS AND WIRE HARNESS (CONNECTOR LOCATION)
EA2	82(1MZ-FE LHD)	COWL WIRE AND ENGINE ROOM MAIN WIRE (UNDER THE ENGINE ROOM J/B NO.2)
	84(5S-FE LHD)	
IG1	86(LHD)	INSTRUMENT PANEL WIRE AND COWL WIRE (LOWER FINISH PANEL)

▽ : GROUND POINTS

CODE	SEE PAGE	GROUND POINTS LOCATION
EA	82(1MZ-FE LHD)	BEHIND HEADLIGHT RH
	84(5S-FE LHD)	
IF	86(LHD)	LEFT KICK PANEL
IG	86(LHD)	INSTRUMENT PANEL BRACE LH
II	86(LHD)	COWL SIDE PANEL RH

⬡ : SPLICE POINTS

CODE	SEE PAGE	WIRE HARNESS WITH SPLICE POINTS	CODE	SEE PAGE	WIRE HARNESS WITH SPLICE POINTS
E 3	82(1MZ-FE LHD)	ENGINE ROOM MAIN WIRE	I10	88(LHD)	ENGINE ROOM MAIN WIRE
	84(5S-FE LHD)				

HEADLIGHT(w/ DAYTIME RUNNING LIGHT LHD)

A10 BLACK

C10

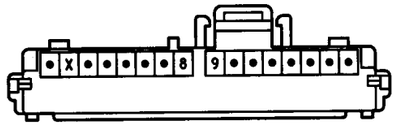

C14

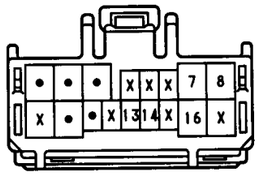

D 2 BLUE

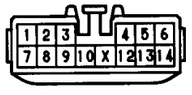

F10 Ⓐ

F12 Ⓒ

F15 Ⓕ ORANGE

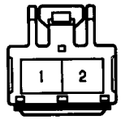

H 5 BLACK

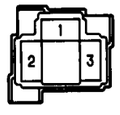

H 6 BLACK

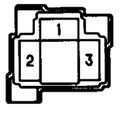

J 5 Ⓐ GRAY

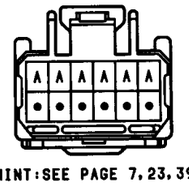

(HINT:SEE PAGE 7,23,39)

J 6 Ⓑ GRAY

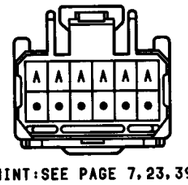

(HINT:SEE PAGE 7,23,39)

J 7 ORANGE

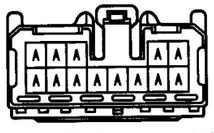

(HINT:SEE PAGE 7,23,39)

J 8

(HINT:SEE PAGE 7,23,39)

J 9

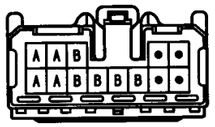

(HINT:SEE PAGE 7,23,39)

J28 Ⓐ

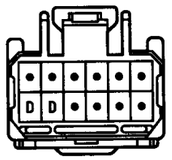

(HINT:SEE PAGE 7,23,39)

J29 Ⓑ

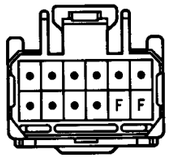

(HINT:SEE PAGE 7,23,39)

J34

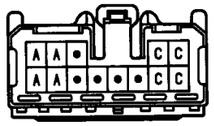

(HINT:SEE PAGE 7,23,39)

HEADLIGHT(w/o DAYTIME RUNNING LIGHT LHD)

C10 BLUE

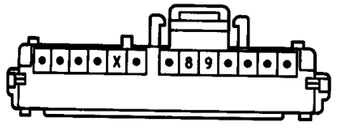

C14

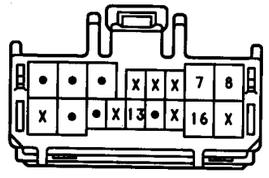

F10 Ⓐ

F12 Ⓒ

H 5 BLACK

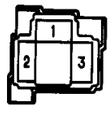

H 6 BLACK

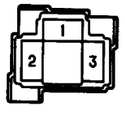

J 5 GRAY

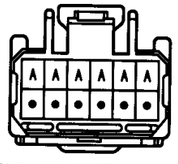

(HINT:SEE PAGE 7,23,39)

J 7 ORANGE

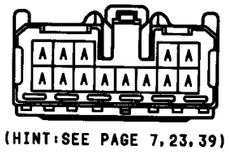

(HINT:SEE PAGE 7,23,39)

J 8

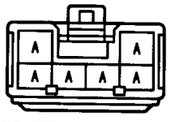

(HINT:SEE PAGE 7,23,39)

J34

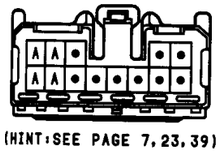

(HINT:SEE PAGE 7,23,39)

HEADLIGHT(w/o DAYTIME RUNNING LIGHT LHD)

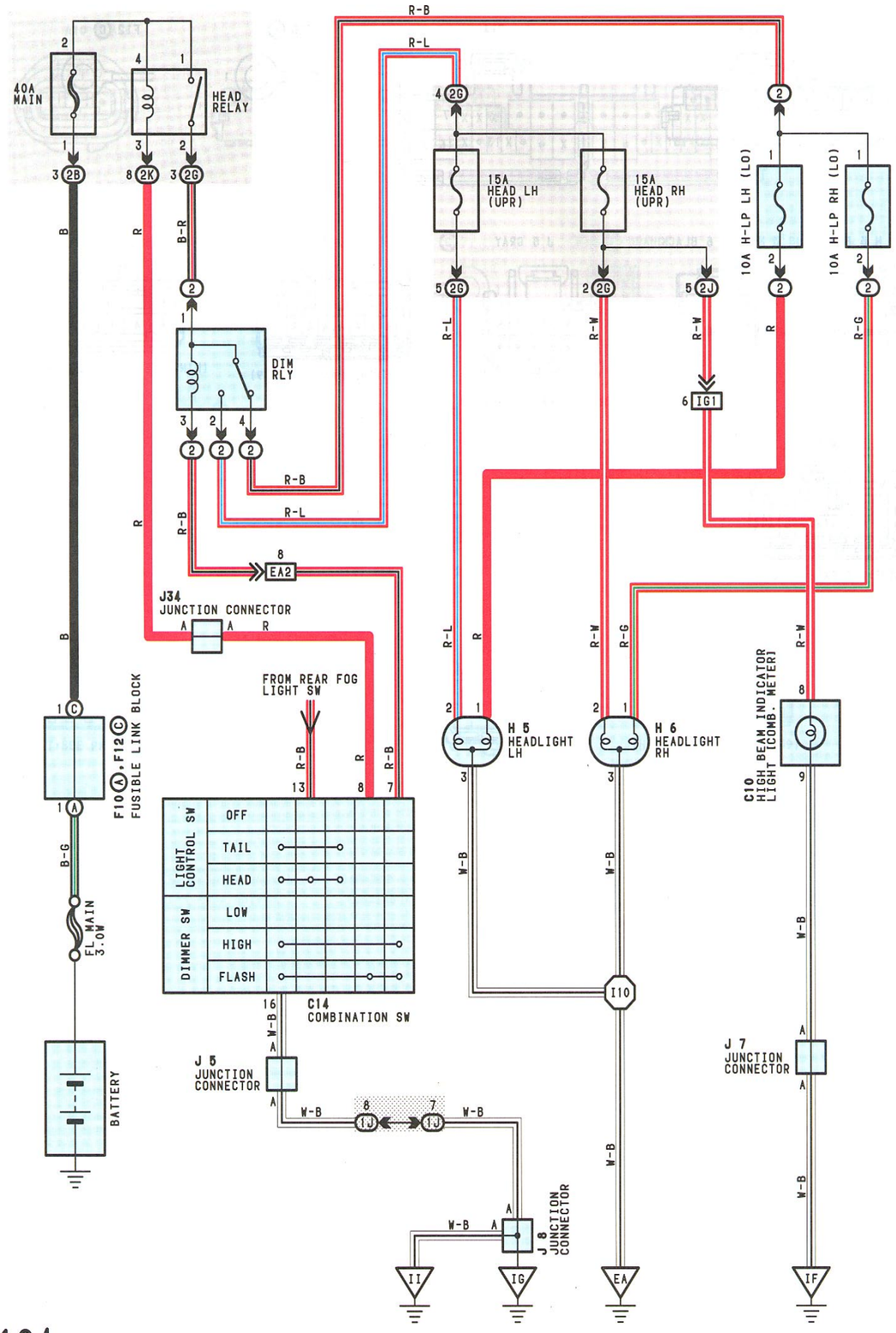

SERVICE HINTS

HEAD RELAY

1-2:CLOSED WITH THE LIGHT CONTROL SW AT **HEAD** POSITION OR THE DIMMER SW AT **FLASH** POSITION

C14 COMBINATION SW

13-16:CLOSED WITH THE LIGHT CONTROL SW AT **HEAD** POSITION
7-16:CLOSED WITH THE DIMMER SW AT **HIGH** OR **FLASH** POSITION
8-16:CLOSED WITH THE DIMMER SW AT **FLASH** POSITION

○ : PARTS LOCATION

CODE		SEE PAGE	CODE		SEE PAGE	CODE	SEE PAGE
C10		64(LHD)	F12	C	62(5S-FE LHD)	J 5	66(LHD)
C14		64(LHD)	H 5		60(1MZ-FE LHD)	J 7	66(LHD)
F10	A	60(1MZ-FE LHD)			62(5S-FE LHD)	J 8	66(LHD)
		62(5S-FE LHD)	H 6		60(1MZ-FE LHD)	J34	66(LHD)
F12	C	60(1MZ-FE LHD)			62(5S-FE LHD)		

: RELAY BLOCKS

CODE	SEE PAGE	RELAY BLOCKS (RELAY BLOCK LOCATION)
2	59(LHD)	ENGINE ROOM R/B NO.2 (NEAR THE BATTERY)

: JUNCTION BLOCK AND WIRE HARNESS CONNECTOR

CODE	SEE PAGE	JUNCTION BLOCK AND WIRE HARNESS (CONNECTOR LOCATION)
1J	52(LHD)	COWL WIRE AND INSTRUMENT PANEL J/B (LOWER FINISH PANEL)
2B	56	ENGINE ROOM MAIN WIRE AND ENGINE ROOM J/B NO.2 (ENGINE COMPARTMENT LEFT)
2G		
2J	56	COWL WIRE AND ENGINE ROOM J/B NO.2 (ENGINE COMPARTMENT LEFT)
2K		

: CONNECTOR JOINING WIRE HARNESS AND WIRE HARNESS

CODE	SEE PAGE	JOINING WIRE HARNESS AND WIRE HARNESS (CONNECTOR LOCATION)
EA2	82(1MZ-FE LHD)	COWL WIRE AND ENGINE ROOM MAIN WIRE (UNDER THE ENGINE ROOM J/B NO.2)
	84(5S-FE LHD)	
IG1	86(LHD)	INSTRUMENT PANEL WIRE AND COWL WIRE (LOWER FINISH PANEL)

: GROUND POINTS

CODE	SEE PAGE	GROUND POINTS LOCATION
EA	82(1MZ-FE LHD)	BEHIND HEADLIGHT RH
	84(5S-FE LHD)	
IF	86(LHD)	LEFT KICK PANEL
IG	86(LHD)	INSTRUMENT PANEL BRACE LH
II	86(LHD)	COWL SIDE PANEL RH

: SPLICE POINTS

CODE	SEE PAGE	WIRE HARNESS WITH SPLICE POINTS	CODE	SEE PAGE	WIRE HARNESS WITH SPLICE POINTS
I10	88(LHD)	ENGINE ROOM MAIN WIRE			

HEADLIGHT CLEANER(LHD)

● 1:W/ DAYTIME RUNNING LIGHT
● 2:W/O DAYTIME RUNNING LIGHT

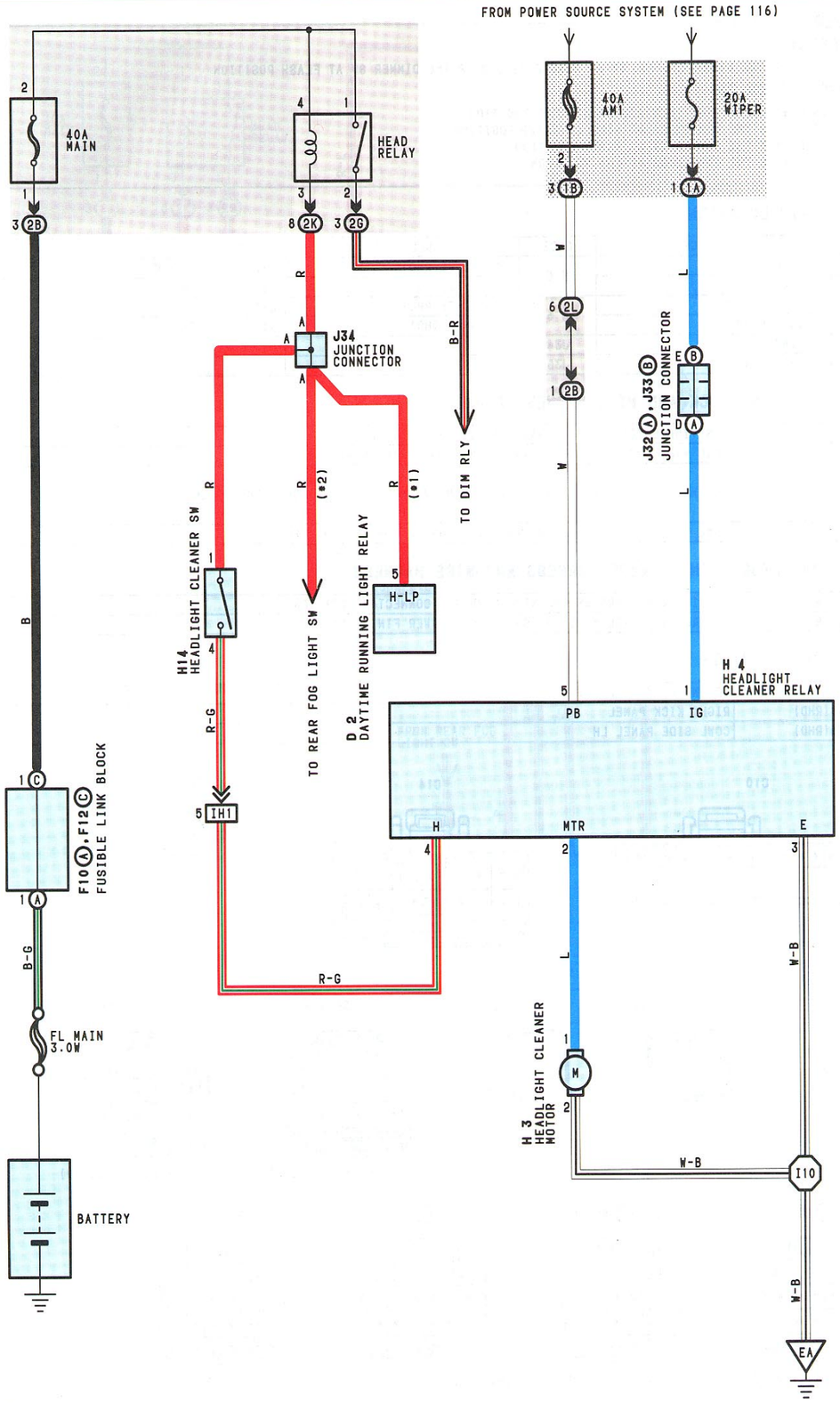

SERVICE HINTS

H 4 HEADLIGHT CLEANER RELAY

5-2:CLOSED WITH THE LIGHT CONTROL SW AT HEAD POSITION AND THE HEADLIGHT CLEANER SW ON

○ : PARTS LOCATION

CODE		SEE PAGE	CODE	SEE PAGE	CODE		SEE PAGE
D 2		64(LHD)	H 3	60(1MZ-FE LHD)	J32	A	66(LHD)
F10	A	60(1MZ-FE LHD)		62(5S-FE LHD)	J33	B	66(LHD)
		62(5S-FE LHD)	H 4	60(1MZ-FE LHD)	J34		66(LHD)
F12	C	60(1MZ-FE LHD)		62(5S-FE LHD)			
		62(5S-FE LHD)	H14	64(LHD)			

: JUNCTION BLOCK AND WIRE HARNESS CONNECTOR

CODE	SEE PAGE	JUNCTION BLOCK AND WIRE HARNESS (CONNECTOR LOCATION)
1A	52(LHD)	COWL WIRE AND INSTRUMENT PANEL J/B (LOWER FINISH PANEL)
1B		
2B	56	ENGINE ROOM MAIN WIRE AND ENGINE ROOM J/B NO.2 (ENGINE COMPARTMENT LEFT)
2G		
2K	56	COWL WIRE AND ENGINE ROOM J/B NO.2 (ENGINE COMPARTMENT LEFT)
2L	56(LHD)	

: CONNECTOR JOINING WIRE HARNESS AND WIRE HARNESS

CODE	SEE PAGE	JOINING WIRE HARNESS AND WIRE HARNESS (CONNECTOR LOCATION)
IH1	86(LHD)	ENGINE ROOM MAIN WIRE AND COWL WIRE (RIGHT KICK PANEL)

▽ : GROUND POINTS

CODE	SEE PAGE	GROUND POINTS LOCATION
EA	82(1MZ-FE LHD)	BEHIND HEADLIGHT RH
	84(5S-FE LHD)	

⬡ : SPLICE POINTS

CODE	SEE PAGE	WIRE HARNESS WITH SPLICE POINTS	CODE	SEE PAGE	WIRE HARNESS WITH SPLICE POINTS
I10	88(LHD)	ENGINE ROOM MAIN WIRE			

D 2 BLUE

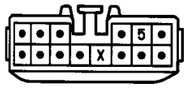

F10 Ⓐ

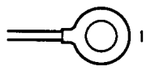

F12 Ⓒ

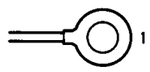

H 3 BLACK

H 4 BLACK

H14 BLACK

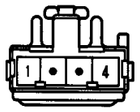

J32 Ⓐ BLACK

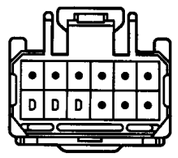

(HINT:SEE PAGE 7,23,39)

J33 Ⓑ BLACK

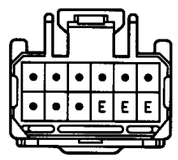

(HINT:SEE PAGE 7,23,39)

J34

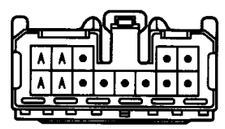

(HINT:SEE PAGE 7,23,39)

LIGHT REMINDER BUZZER(LHD)

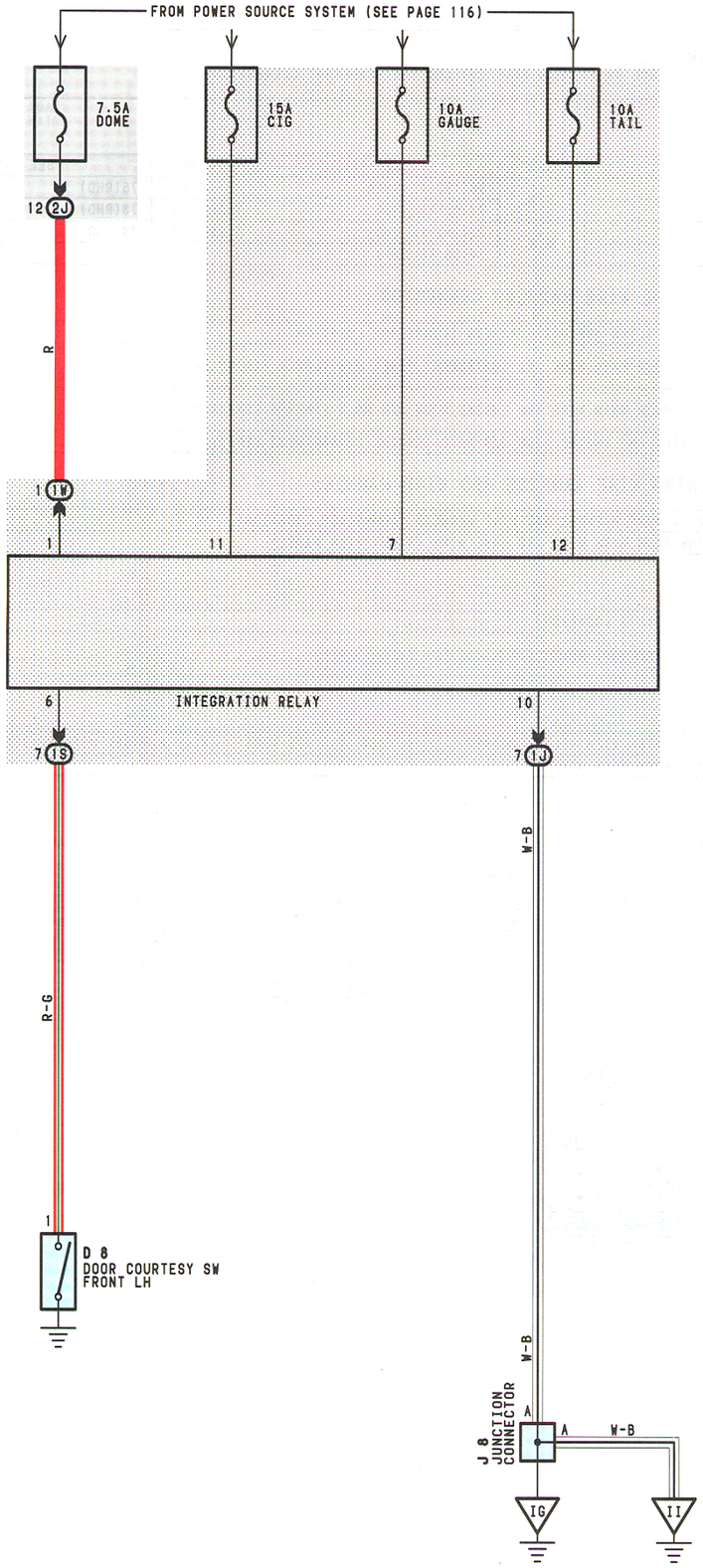

SYSTEM OUTLINE

WITH THE IGNITION SW IN **ACC** POSITION, CURRENT FLOWS TO **TERMINAL 11** OF THE INTEGRATION RELAY. WHEN THE IGNITION SW IS TURNED TO **ON** POSITION, CURRENT FLOWS TO **TERMINAL 7** OF THE INTEGRATION RELAY. WHEN THE LIGHT CONTROL SW IS TURNED TO **TAIL** OR **HEAD** POSITION, CURRENT IS APPLIED TO **TERMINAL 12** OF THE INTEGRATION RELAY.

LIGHT REMINDER SYSTEM

WHEN THE LIGHT CONTROL SW IS IN **TAIL** OR **HEAD** POSITION, THE IGNITION SW IN **OFF** POSITION AND THE DRIVER'S DOOR IS OPENED (DOOR COURTESY SW FRONT LH ON), THE CURRENT FLOW TO **TERMINALS 7** AND **11** OF THE INTEGRATION RELAY IS STOPPED. AS A RESULT, THE RELAY IS ACTIVATED AND CURRENT FLOWS FROM **TERMINAL 1** OF THE INTEGRATION RELAY → **TERMINAL 10** → **GROUND**, SOUNDING THE LIGHT REMINDER BUZZER.

SERVICE HINTS

INTEGRATION RELAY

7-GROUND : APPROX. 12 VOLTS WITH THE IGNITION SW AT **ON** POSITION
11-GROUND : APPROX. 12 VOLTS WITH THE IGNITION SW AT **ACC** OR **ON** POSITION
12-GROUND : APPROX. 12 VOLTS WITH THE LIGHT CONTROL SW AT **TAIL** OR **HEAD** POSITION
6-GROUND : CONTINUITY WITH THE DRIVER'S DOOR OPEN

D 8 DOOR COURTESY SW FRONT LH

1-GROUND : CONTINUITY WITH THE DRIVER'S DOOR OPEN

○ : PARTS LOCATION

CODE	SEE PAGE	CODE	SEE PAGE	CODE	SEE PAGE
D 8	68(LHD)	J 8	66(LHD)		

⬭ : JUNCTION BLOCK AND WIRE HARNESS CONNECTOR

CODE	SEE PAGE	JUNCTION BLOCK AND WIRE HARNESS (CONNECTOR LOCATION)
1J	52(LHD)	COWL WIRE AND INSTRUMENT PANEL J/B (LOWER FINISH PANEL)
1S	52(LHD)	FLOOR WIRE AND INSTRUMENT PANEL J/B (LOWER FINISH PANEL)
1W	52(LHD)	COWL WIRE AND INSTRUMENT PANEL J/B (LOWER FINISH PANEL)
2J	56	COWL WIRE AND ENGINE ROOM J/B NO.2 (ENGINE COMPARTMENT LEFT)

▽ : GROUND POINTS

CODE	SEE PAGE	GROUND POINTS LOCATION
IG	86(LHD)	INSTRUMENT PANEL BRACE LH
II	86(LHD)	COWL SIDE PANEL RH

D 8

J 8

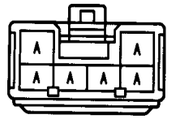

(HINT:SEE PAGE 7, 23, 39)

HEADLIGHT BEAM LEVEL CONTROL(LHD)

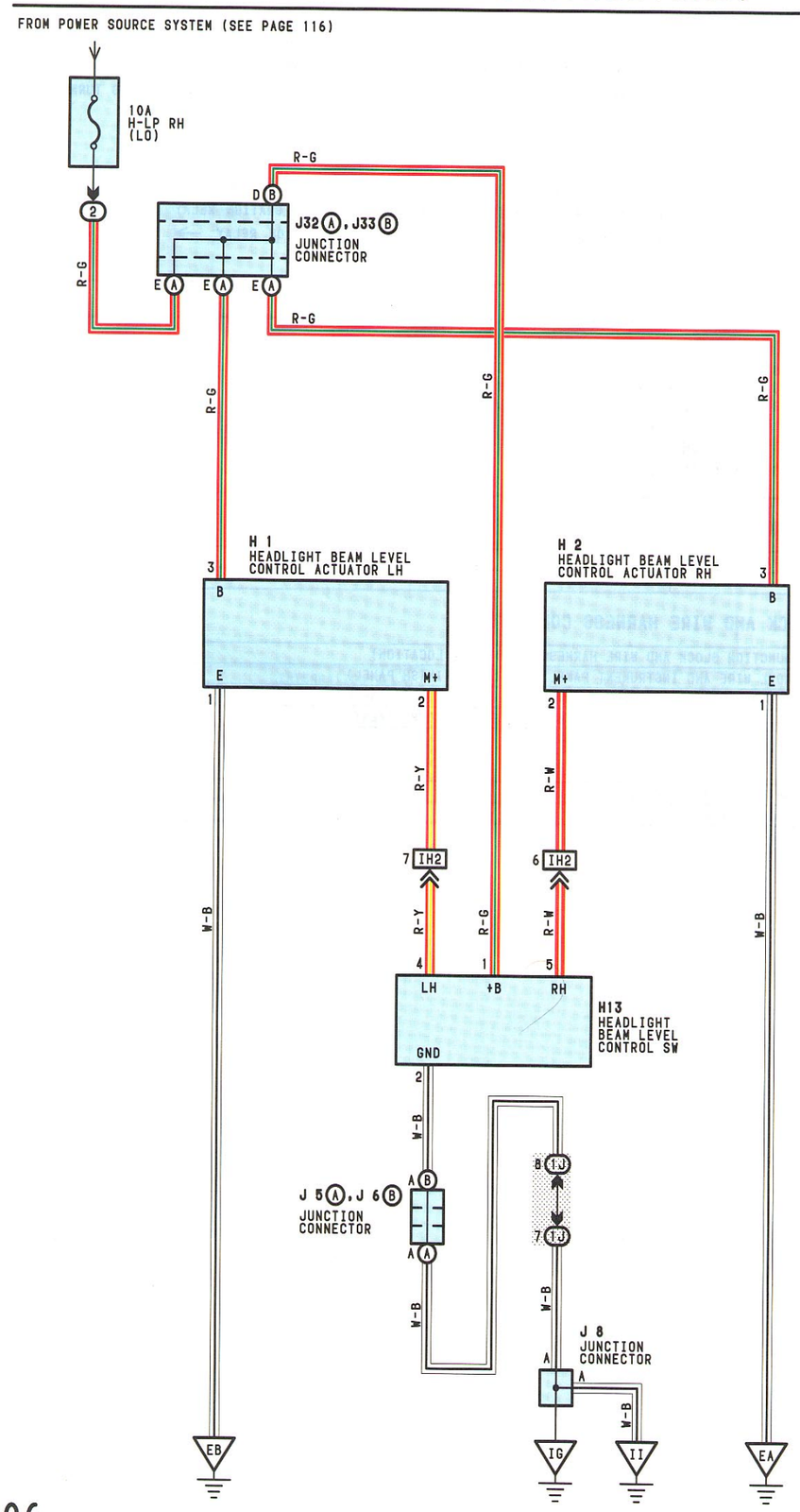

SERVICE HINTS

H 1, H 2 HEADLIGHT BEAM LEVEL CONTROL ACTUATOR LH, RH

3-GROUND: APPROX. 12 VOLTS WITH THE LIGHT CONTROL SW AT HEAD POSITION
1-GROUND: ALWAYS CONTINUITY

H13 HEADLIGHT BEAM LEVEL CONTROL SW

1-GROUND: APPROX. 12 VOLTS WITH THE LIGHT CONTROL SW AT HEAD POSITION

○ : PARTS LOCATION

CODE	SEE PAGE	CODE		SEE PAGE	CODE		SEE PAGE
H 1	60(1MZ-FE LHD)	H13		64(LHD)	J32	A	66(LHD)
	62(5S-FE LHD)	J 5	A	66(LHD)	J33	B	66(LHD)
H 2	60(1MZ-FE LHD)	J 6	B	66(LHD)			
	62(5S-FE LHD)	J 8		66(LHD)			

○ : RELAY BLOCKS

CODE	SEE PAGE	RELAY BLOCKS (RELAY BLOCK LOCATION)
2	59(LHD)	ENGINE ROOM R/B NO.2 (NEAR THE BATTERY)

○ : JUNCTION BLOCK AND WIRE HARNESS CONNECTOR

CODE	SEE PAGE	JUNCTION BLOCK AND WIRE HARNESS (CONNECTOR LOCATION)
1J	52(LHD)	COWL WIRE AND INSTRUMENT PANEL J/B (LOWER FINISH PANEL)

□ : CONNECTOR JOINING WIRE HARNESS AND WIRE HARNESS

CODE	SEE PAGE	JOINING WIRE HARNESS AND WIRE HARNESS (CONNECTOR LOCATION)
IH2	86(LHD)	ENGINE ROOM MAIN WIRE AND COWL WIRE (RIGHT KICK PANEL)

▽ : GROUND POINTS

CODE	SEE PAGE	GROUND POINTS LOCATION
EA	82(1MZ-FE LHD)	BEHIND HEADLIGHT RH
	84(5S-FE LHD)	
EB	82(1MZ-FE LHD)	BEHIND HEADLIGHT LH
	84(5S-FE LHD)	
IG	86(LHD)	INSTRUMENT PANEL BRACE LH
II	86(LHD)	COWL SIDE PANEL RH

H 1 GRAY

H 2 GRAY

H13 BLACK

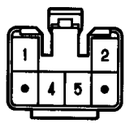

J 5 (A) GRAY

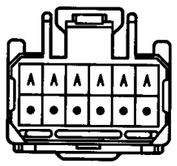

(HINT: SEE PAGE 7, 23, 39)

J 6 (B) GRAY

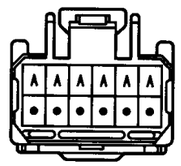

(HINT: SEE PAGE 7, 23, 39)

J 8

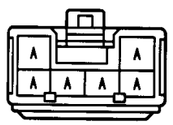

(HINT: SEE PAGE 7, 23, 39)

J32 (A) BLACK

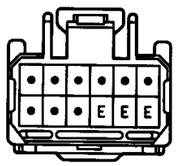

(HINT: SEE PAGE 7, 23, 39)

J33 (B) BLACK

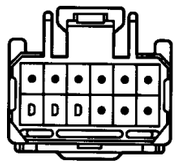

(HINT: SEE PAGE 7, 23, 39)

FRONT FOG LIGHT(LHD)

* 1:W/ DAYTIME RUNNING LIGHT
* 2:W/O DAYTIME RUNNING LIGHT

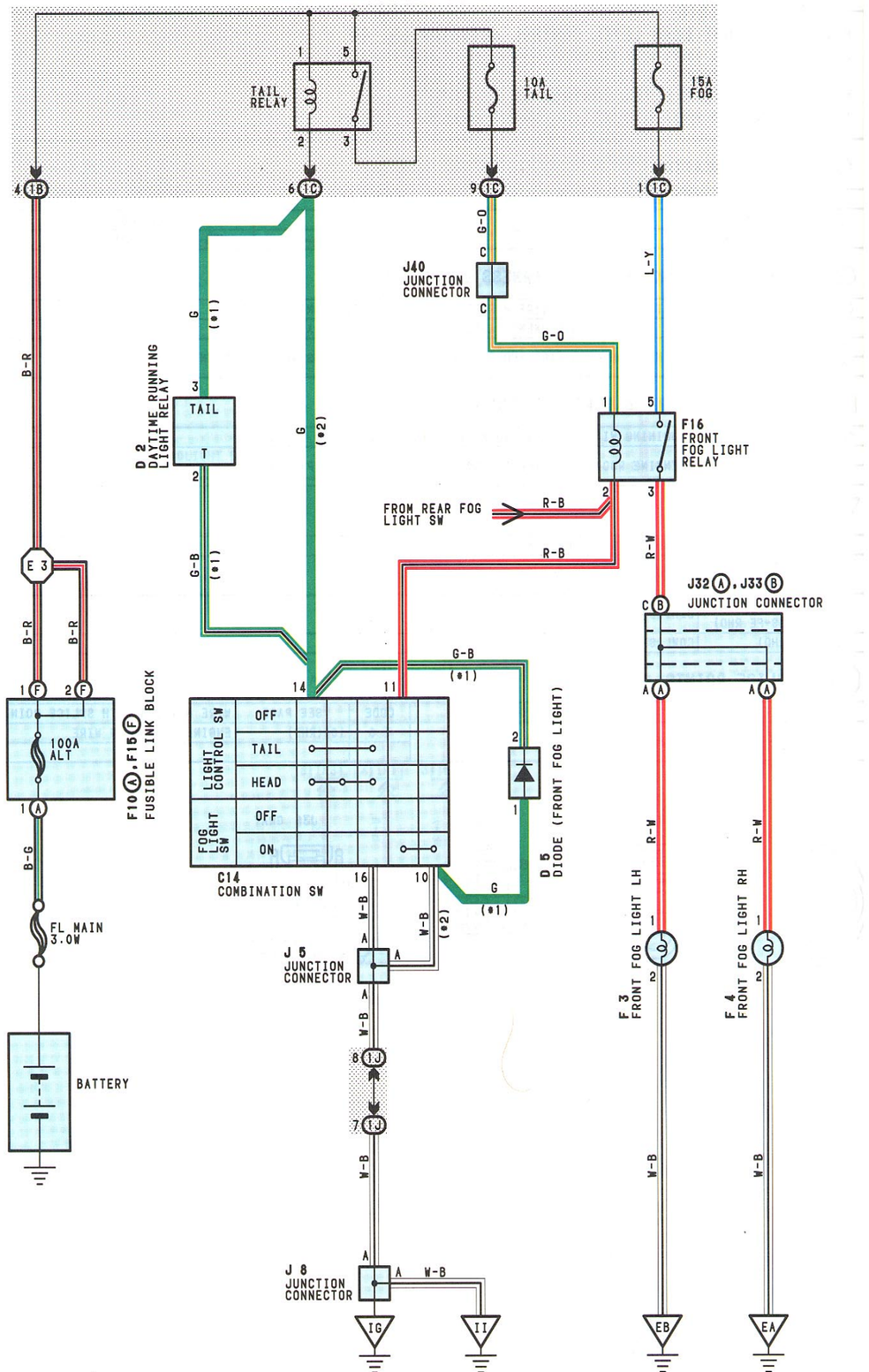

SERVICE HINTS

F16 FRONT FOG LIGHT RELAY

5-3:CLOSED WITH THE LIGHT CONTROL SW AT TAIL OR HEAD POSITION AND THE FOG LIGHT SW ON POSITION

○ : PARTS LOCATION

CODE	SEE PAGE	CODE		SEE PAGE	CODE		SEE PAGE
C14	64(LHD)	F 4		62(5S-FE LHD)	J 5		66(LHD)
D 2	64(LHD)	F10	A	60(1MZ-FE LHD)	J 8		66(LHD)
D 5	64(LHD)			62(5S-FE LHD)	J32	A	66(LHD)
F 3	60(1MZ-FE LHD)	F15	F	60(1MZ-FE LHD)	J33	B	66(LHD)
	62(5S-FE LHD)			62(5S-FE LHD)	J40		66(LHD)
F 4	60(1MZ-FE LHD)	F16		64(LHD)			

: JUNCTION BLOCK AND WIRE HARNESS CONNECTOR

CODE	SEE PAGE	JUNCTION BLOCK AND WIRE HARNESS (CONNECTOR LOCATION)
1B	52(LHD)	COWL WIRE AND INSTRUMENT PANEL J/B (LOWER FINISH PANEL)
1C		
1J		

▽ : GROUND POINTS

CODE	SEE PAGE	GROUND POINTS LOCATION
EA	82(1MZ-FE LHD)	BEHIND HEADLIGHT RH
	84(5S-FE LHD)	
EB	82(1MZ-FE LHD)	BEHIND HEADLIGHT LH
	84(5S-FE LHD)	
IG	86(LHD)	INSTRUMENT PANEL BRACE LH
II	86(LHD)	COWL SIDE PANEL RH

: SPLICE POINTS

CODE	SEE PAGE	WIRE HARNESS WITH SPLICE POINTS	CODE	SEE PAGE	WIRE HARNESS WITH SPLICE POINTS
E 3	82(1MZ-FE LHD)	COWL WIRE	E 3	84(5S-FE LHD)	COWL WIRE

C14

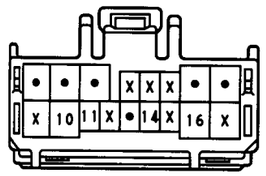

D 2 BLUE

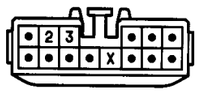

D 5 BLACK

F 3

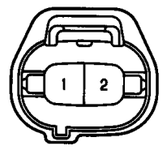

F 4

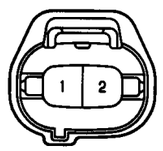

F10 (A)

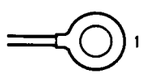

F15 (F) ORANGE

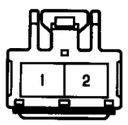

F16

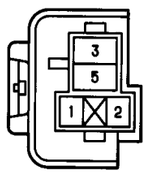

J 5 GRAY

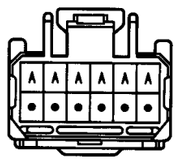

(HINT:SEE PAGE 7,23,39)

J 8

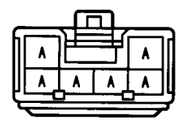

(HINT:SEE PAGE 7,23,39)

J32 (A) BLACK

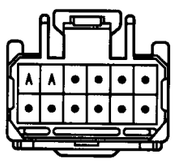

(HINT:SEE PAGE 7,23,39)

J33 (B) BLACK

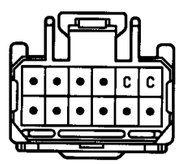

(HINT:SEE PAGE 7,23,39)

J40 GRAY

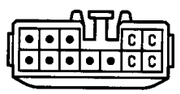

(HINT:SEE PAGE 7,23,39)

REAR FOG LIGHT(LHD)

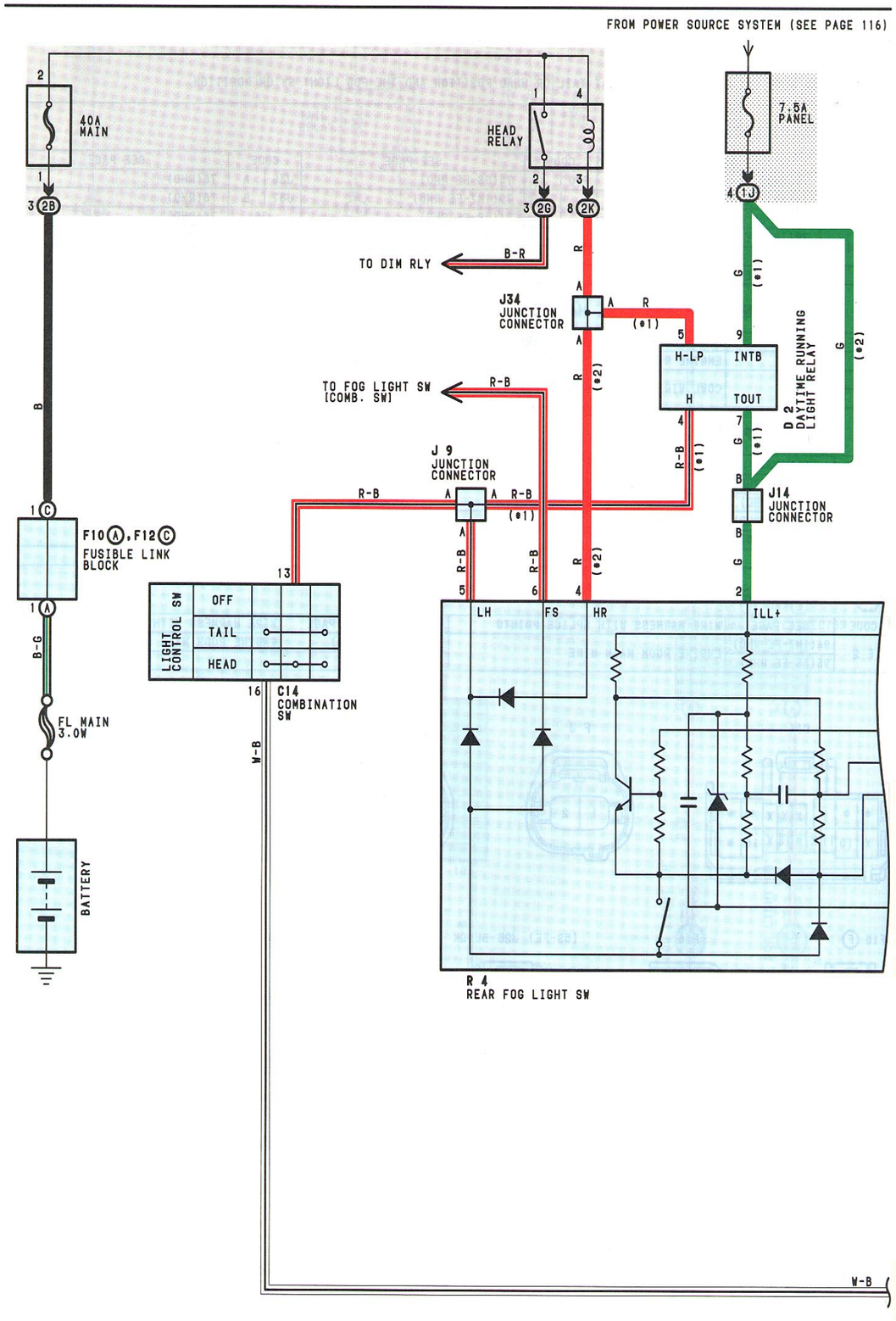

* 1:W/ DAYTIME RUNNING LIGHT
* 2:W/O DAYTIME RUNNING LIGHT

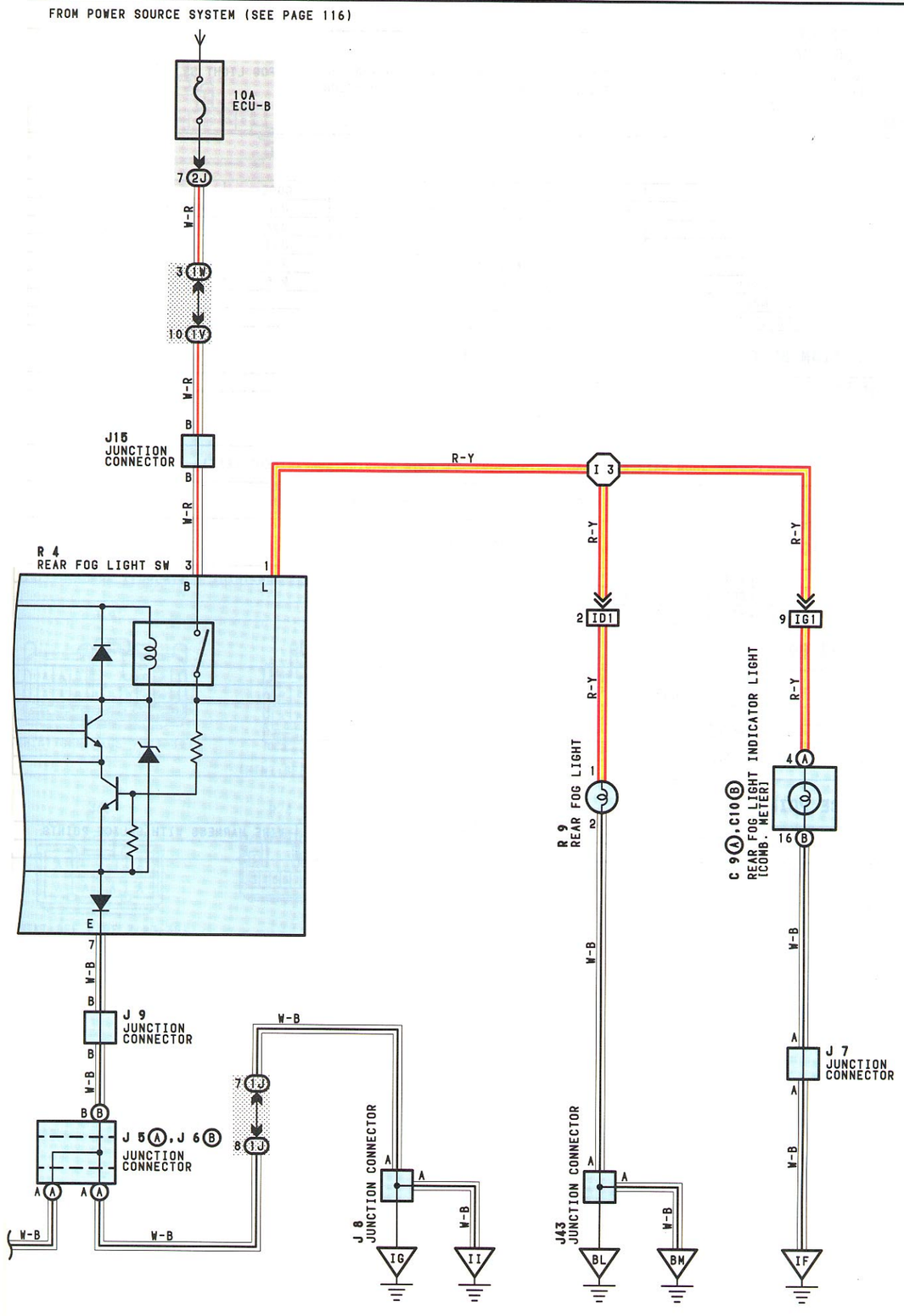

REAR FOG LIGHT(LHD)

SERVICE HINTS

R 4 REAR FOG LIGHT SW

1-GROUND:APPROX. 12 VOLTS WITH THE LIGHT CONTROL SW AT **HEAD** POSITION AND THE REAR FOG LIGHT SW AT **ON** POSITION
2-GROUND:APPROX. 12 VOLTS WITH THE LIGHT CONTROL SW AT **HEAD OR TAIL** POSITION
3,4,5-GROUND:ALWAYS APPROX. 12 VOLTS
7-GROUND:ALWAYS CONTINUITY

○ : PARTS LOCATION

CODE		SEE PAGE	CODE		SEE PAGE	CODE	SEE PAGE
C 9	A	64(LHD)	F12	C	62(5S-FE LHD)	J15	66(LHD)
C10	B	64(LHD)	J 5	A	66(LHD)	J34	66(LHD)
C14		64(LHD)	J 6	B	66(LHD)	J43	68(LHD)
D 2		64(LHD)	J 7		66(LHD)	R 4	66(LHD)
F10	A	60(1MZ-FE LHD)	J 8		66(LHD)	R 9	68(LHD)
		62(5S-FE LHD)	J 9		66(LHD)		
F12	C	60(1MZ-FE LHD)	J14		66(LHD)		

: JUNCTION BLOCK AND WIRE HARNESS CONNECTOR

CODE	SEE PAGE	JUNCTION BLOCK AND WIRE HARNESS (CONNECTOR LOCATION)
1J	52(LHD)	COWL WIRE AND INSTRUMENT PANEL J/B (LOWER FINISH PANEL)
1V		
1W		
2B	56	ENGINE ROOM MAIN WIRE AND ENGINE ROOM J/B NO.2 (ENGINE COMPARTMENT LEFT)
2G		
2J	56	COWL WIRE AND ENGINE ROOM J/B NO.2 (ENGINE COMPARTMENT LEFT)
2K		

: CONNECTOR JOINING WIRE HARNESS AND WIRE HARNESS

CODE	SEE PAGE	JOINING WIRE HARNESS AND WIRE HARNESS (CONNECTOR LOCATION)
ID1	86(LHD)	FLOOR WIRE AND COWL WIRE (LEFT KICK PANEL)
IG1	86(LHD)	INSTRUMENT PANEL WIRE AND COWL WIRE (LOWER FINISH PANEL)

▽ : GROUND POINTS

CODE	SEE PAGE	GROUND POINTS LOCATION
IF	86(LHD)	LEFT KICK PANEL
IG	86(LHD)	INSTRUMENT PANEL BRACE LH
II	86(LHD)	COWL SIDE PANEL RH
BL	90(LHD)	UNDER THE LEFT CENTER PILLAR
BM	90(LHD)	BACK PANEL CENTER

: SPLICE POINTS

CODE	SEE PAGE	WIRE HARNESS WITH SPLICE POINTS	CODE	SEE PAGE	WIRE HARNESS WITH SPLICE POINTS
I 3	88(LHD)	COWL WIRE			

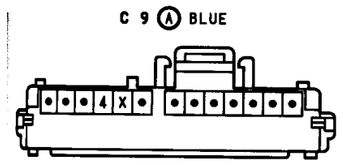

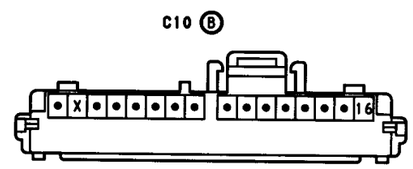

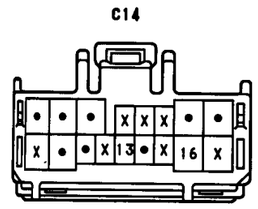

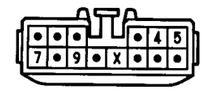

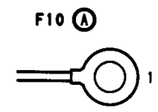

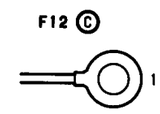

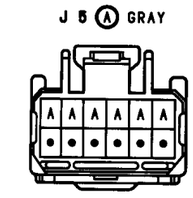

(HINT:SEE PAGE 7,23,39)

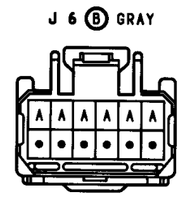

(HINT:SEE PAGE 7,23,39)

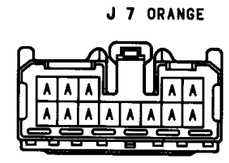

(HINT:SEE PAGE 7,23,39)

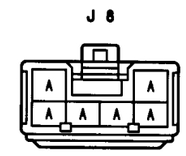

(HINT:SEE PAGE 7,23,39)

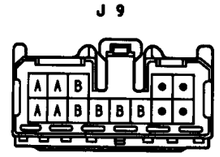

(HINT:SEE PAGE 7,23,39)

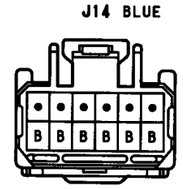

(HINT:SEE PAGE 7,23,39)

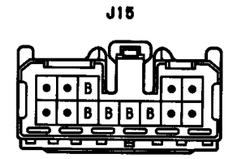

(HINT:SEE PAGE 7,23,39)

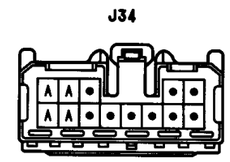

(HINT:SEE PAGE 7,23,39)

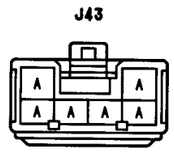

(HINT:SEE PAGE 7,23,39)

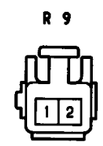

TURN SIGNAL AND HAZARD WARNING LIGHT(LHD)

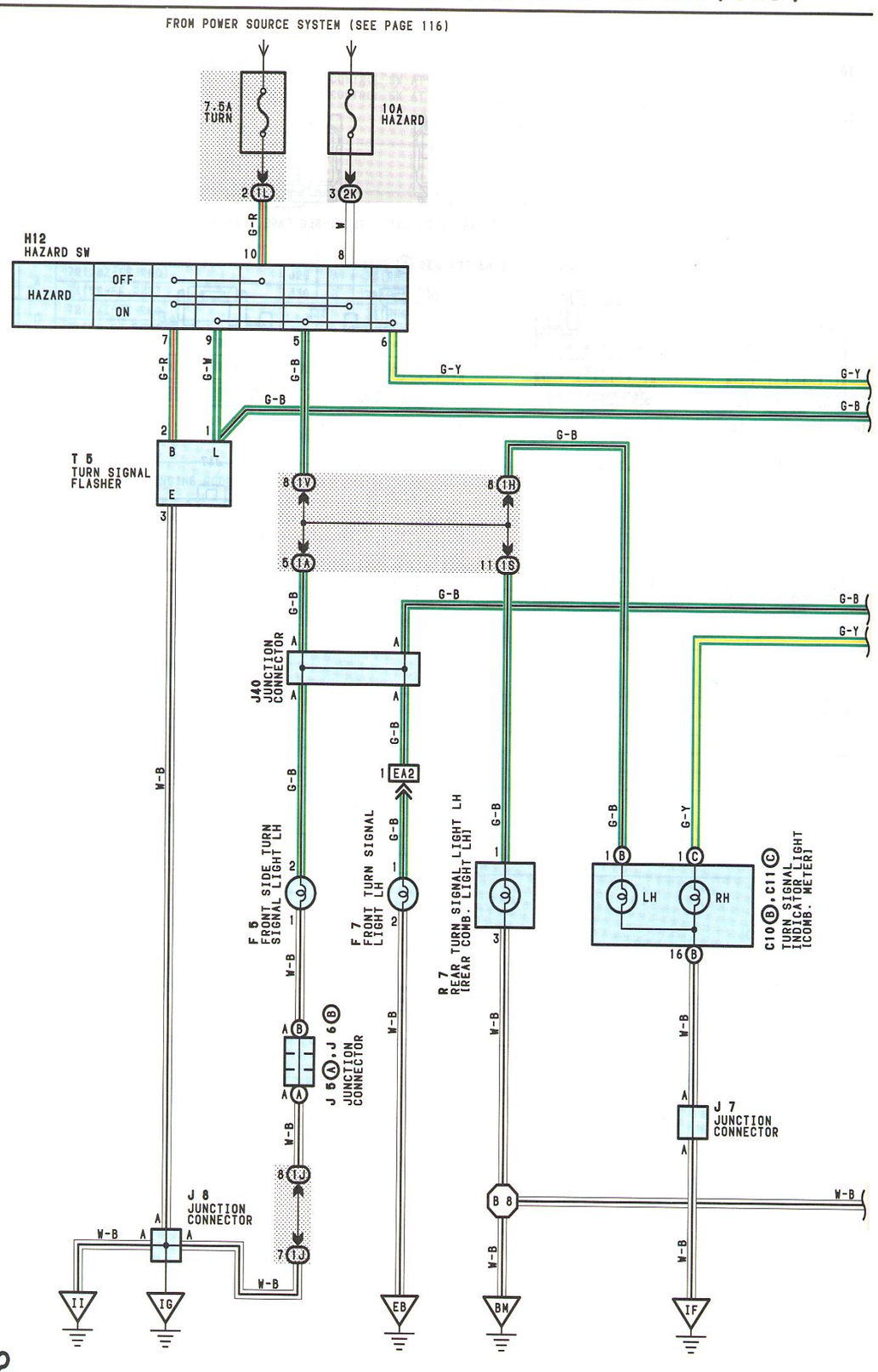

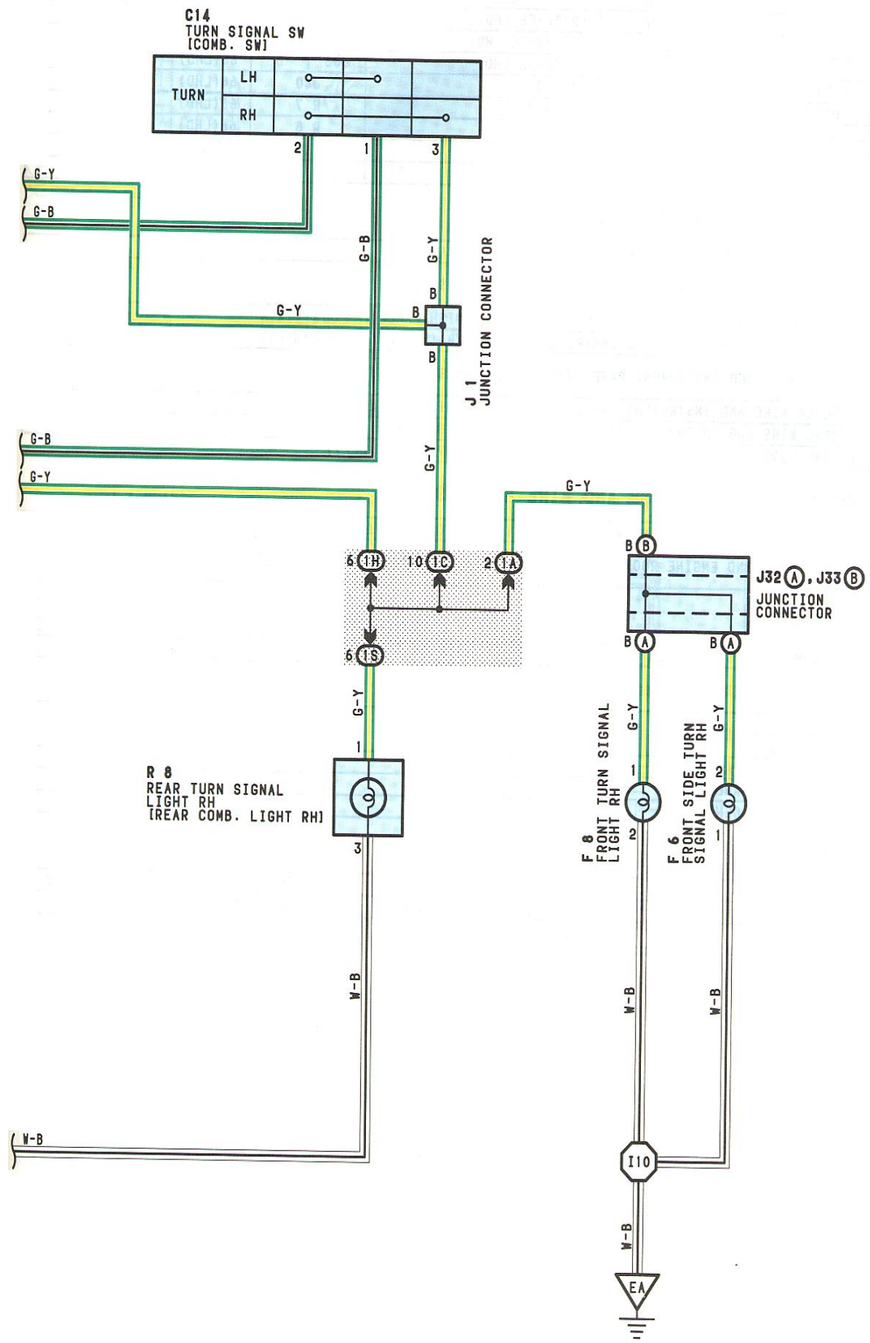

TURN SIGNAL AND HAZARD WARNING LIGHT(LHD)

SERVICE HINTS

T 5 TURN SIGNAL FLASHER

2-GROUND:APPROX. 12 VOLTS WITH THE IGNITION SW ON OR THE HAZARD SW ON
1-GROUND:CHANGES FROM 12 TO 0 VOLTS WITH THE IGNITION SW ON AND THE TURN SIGNAL SW [COMB. SW] LEFT OR RIGHT, OR WITH THE HAZARD SW ON
3-GROUND:ALWAYS CONTINUITY

○ : PARTS LOCATION

CODE		SEE PAGE	CODE		SEE PAGE	CODE		SEE PAGE
C10	B	64(LHD)	F 7		62(5S-FE LHD)	J 8		66(LHD)
C11	C	64(LHD)	F 8		60(1MZ-FE LHD)	J32	A	66(LHD)
C14		64(LHD)			62(5S-FE LHD)	J33	B	66(LHD)
F 5		60(1MZ-FE LHD)	H12		64(LHD)	J40		66(LHD)
		62(5S-FE LHD)	J 1		66(LHD)	R 7		68(LHD)
F 6		60(1MZ-FE LHD)	J 5	A	66(LHD)	R 8		68(LHD)
		62(5S-FE LHD)	J 6	B	66(LHD)	T 5		66(LHD)
F 7		60(1MZ-FE LHD)	J 7		66(LHD)			

: JUNCTION BLOCK AND WIRE HARNESS CONNECTOR

CODE	SEE PAGE	JUNCTION BLOCK AND WIRE HARNESS (CONNECTOR LOCATION)
1A	52(LHD)	COWL WIRE AND INSTRUMENT PANEL J/B (LOWER FINISH PANEL)
1C		
1F	52(LHD)	ROOF WIRE AND INSTRUMENT PANEL J/B (LOWER FINISH PANEL)
1H	52(LHD)	INSTRUMENT PANEL WIRE AND INSTRUMENT PANEL J/B (LOWER FINISH PANEL)
1J	52(LHD)	COWL WIRE AND INSTRUMENT PANEL J/B (LOWER FINISH PANEL)
1L		
1S	52(LHD)	FLOOR WIRE AND INSTRUMENT PANEL J/B (LOWER FINISH PANEL)
1V	52(LHD)	COWL WIRE AND INSTRUMENT PANEL J/B (LOWER FINISH PANEL)
2K	56	COWL WIRE AND ENGINE ROOM J/B NO.2 (ENGINE COMPARTMENT LEFT)

: CONNECTOR JOINING WIRE HARNESS AND WIRE HARNESS

CODE	SEE PAGE	JOINING WIRE HARNESS AND WIRE HARNESS (CONNECTOR LOCATION)
EA2	82(1MZ-FE LHD)	COWL WIRE AND ENGINE ROOM MAIN WIRE (UNDER THE ENGINE ROOM J/B NO.2)
	84(5S-FE LHD)	

▽ : GROUND POINTS

CODE	SEE PAGE	GROUND POINTS LOCATION
EA	82(1MZ-FE LHD)	BEHIND HEADLIGHT RH
	84(5S-FE LHD)	
EB	82(1MZ-FE LHD)	BEHIND HEADLIGHT LH
	84(5S-FE LHD)	
IG	86(LHD)	INSTRUMENT PANEL BRACE LH
II	86(LHD)	COWL SIDE PANEL RH
BM	90(LHD)	BACK PANEL CENTER

: SPLICE POINTS

CODE	SEE PAGE	WIRE HARNESS WITH SPLICE POINTS	CODE	SEE PAGE	WIRE HARNESS WITH SPLICE POINTS
I10	88(LHD)	COWL WIRE	B 8	90(LHD)	FLOOR WIRE

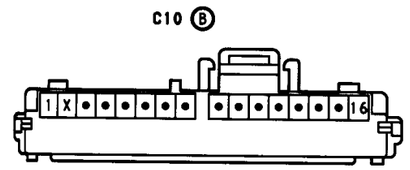

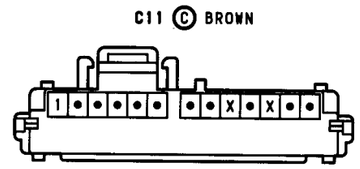

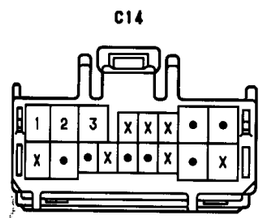

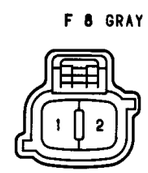

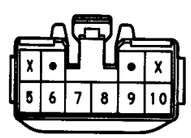

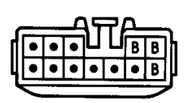

(HINT:SEE PAGE 7,23,39)

(HINT:SEE PAGE 7,23,39)

(HINT:SEE PAGE 7,23,39)

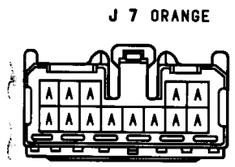

(HINT:SEE PAGE 7,23,39)

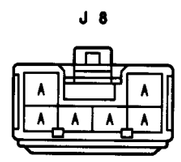

(HINT:SEE PAGE 7,23,39)

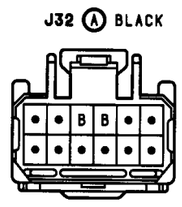

(HINT:SEE PAGE 7,23,39)

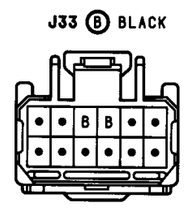

(HINT:SEE PAGE 7,23,39)

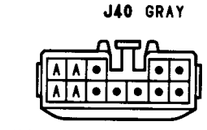

(HINT:SEE PAGE 7,23,39)

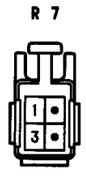

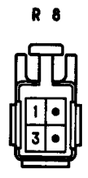

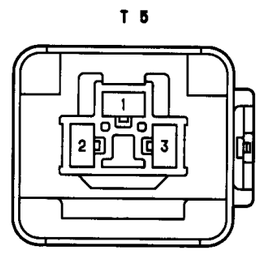

ILLUMINATION(LHD)

* 1:W/ DAYTIME RUNNING LIGHT
* 2:W/O DAYTIME RUNNING LIGHT

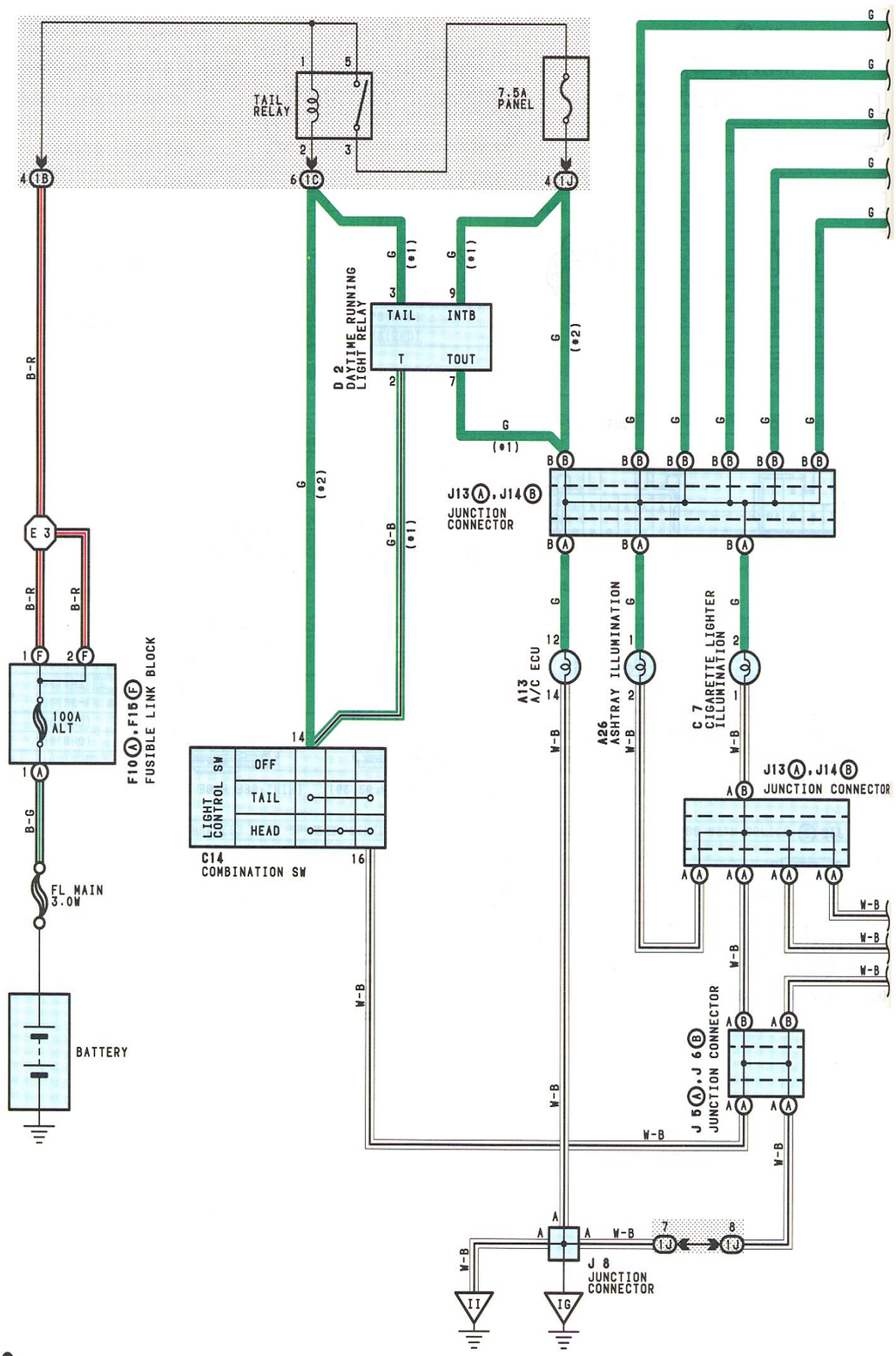

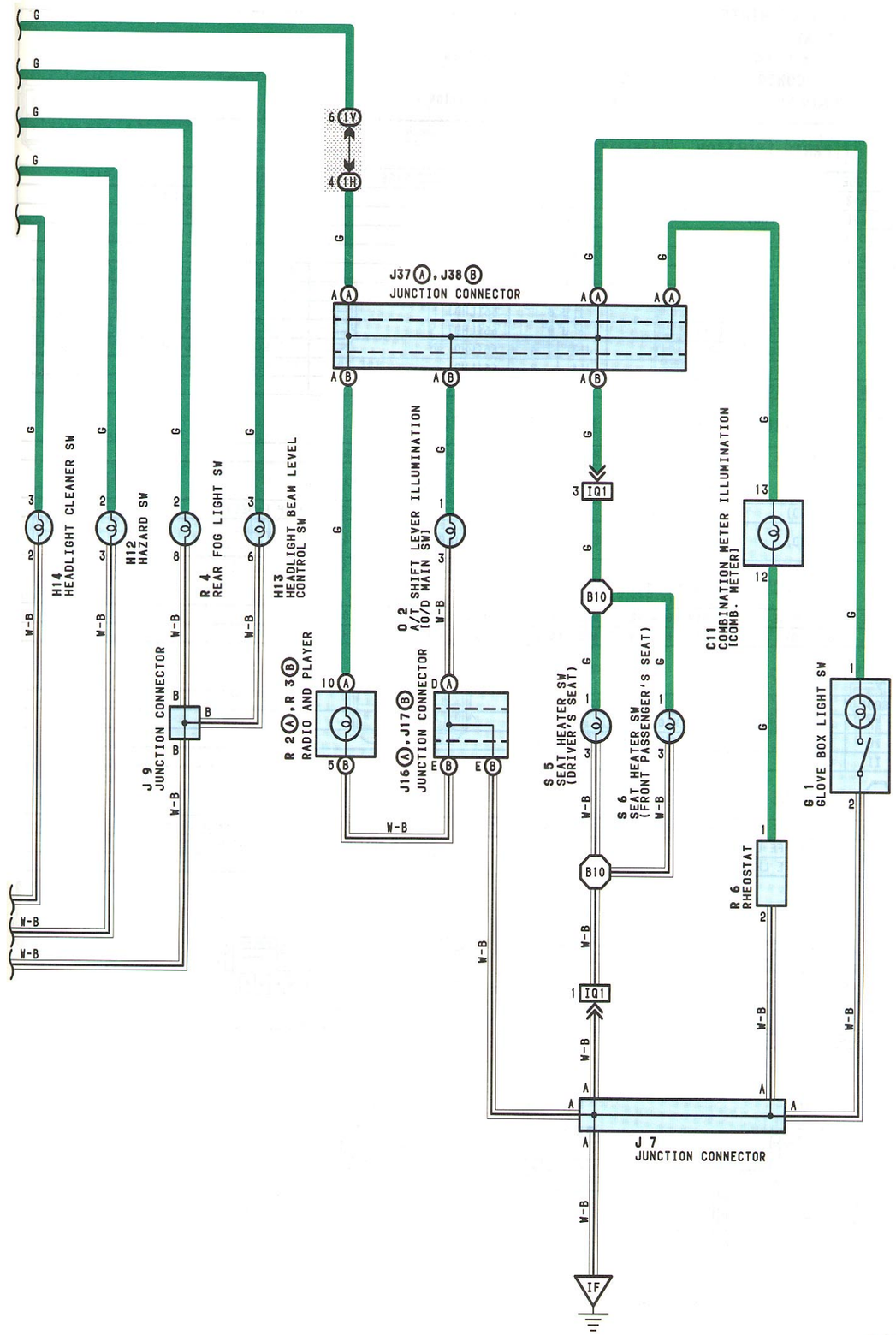

ILLUMINATION(LHD)

SERVICE HINTS

TAIL RELAY

5-3:CLOSED WITH THE LIGHT CONTROL SW AT TAIL OR HEAD POSITION

C14 LIGHT CONTROL SW [COMB. SW]

14-16:CLOSED WITH THE LIGHT CONTROL SW AT TAIL OR HEAD POSITION

○ : PARTS LOCATION

CODE		SEE PAGE	CODE		SEE PAGE	CODE		SEE PAGE
A13		64(LHD)	H12		64(LHD)	J17	B	66(LHD)
A26		64(LHD)	H13		64(LHD)	J37	A	66(LHD)
C 7		64(LHD)	H14		64(LHD)	J38	B	66(LHD)
C11		64(LHD)	J 5	A	66(LHD)	O 2		66(LHD)
C14		64(LHD)	J 6	B	66(LHD)	R 2	A	66(LHD)
D 2		64(LHD)	J 7		66(LHD)	R 3	B	66(LHD)
F10	A	60(LHD)	J 8		66(LHD)	R 4		66(LHD)
		62(1NZ-FE LHD)	J 9		66(LHD)	R 6		66(LHD)
F15	F	60(5S-FE LHD)	J13	A	66(LHD)	S 5		66(LHD)
		62(1NZ-FE LHD)	J14	B	66(LHD)	S 6		66(LHD)
G 1		64(5S-FE LHD)	J16	A	66(LHD)			

: JUNCTION BLOCK AND WIRE HARNESS CONNECTOR

CODE	SEE PAGE	JUNCTION BLOCK AND WIRE HARNESS (CONNECTOR LOCATION)
1B	52(LHD)	COWL WIRE AND INSTRUMENT PANEL J/B (LOWER FINISH PANEL)
1C		
1H	52(LHD)	INSTRUMENT PANEL WIRE AND INSTRUMENT PANEL J/B (LOWER FINISH PANEL)
1J	52(LHD)	COWL WIRE AND INSTRUMENT PANEL J/B (LOWER FINISH PANEL)
1V		

□ : CONNECTOR JOINING WIRE HARNESS AND WIRE HARNESS

CODE	SEE PAGE	JOINING WIRE HARNESS AND WIRE HARNESS (CONNECTOR LOCATION)
IQ1	88(LHD)	FLOOR NO.3 WIRE AND INSTRUMENT PANEL WIRE (UNDER THE CONSOLE BOX)

▽ : GROUND POINTS

CODE	SEE PAGE	GROUND POINTS LOCATION
IF	86(LHD)	LEFT KICK PANEL
IG	86(LHD)	INSTRUMENT PANEL BRACE LH
II	86(LHD)	COWL SIDE PANEL RH

⬡ : SPLICE POINTS

CODE	SEE PAGE	WIRE HARNESS WITH SPLICE POINTS	CODE	SEE PAGE	WIRE HARNESS WITH SPLICE POINTS
E 3	82(1NZ-FE LHD)	COWL WIRE	B10	92(LHD)	FLOOR NO.3 WIRE
	84(5S-FE LHD)				

A13

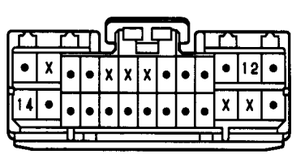

A26

C 7

C11 BROWN

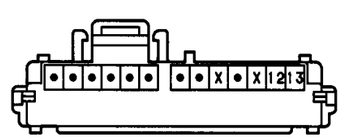

C14

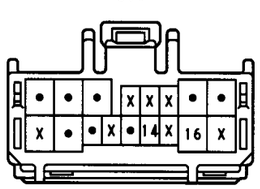

D 2 BLUE

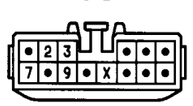

F10 Ⓐ

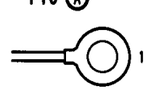

F15 Ⓕ ORANGE

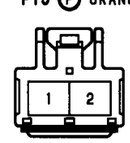

G 1 BLACK

H12 BLACK

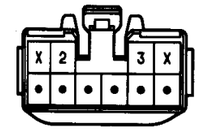

H13

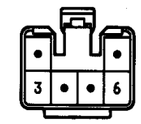

H14 BLACK

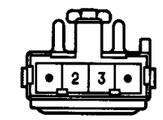

J 5 Ⓐ GRAY

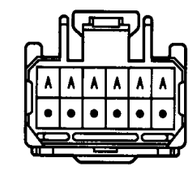

(HINT:SEE PAGE 7,23,39)

J 6 Ⓑ GRAY

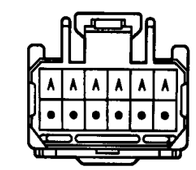

(HINT:SEE PAGE 7,23,39)

J 7 ORANGE

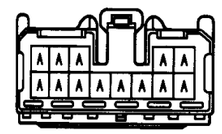

(HINT:SEE PAGE 7,23,39)

J 8

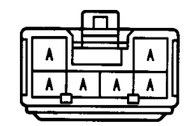

(HINT:SEE PAGE 7,23,39)

J 9

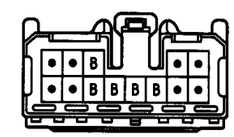

(HINT:SEE PAGE 7,23,39)

J13 Ⓐ BLUE

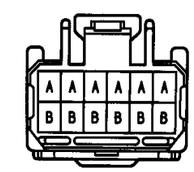

(HINT:SEE PAGE 7,23,39)

J14 Ⓑ BLUE

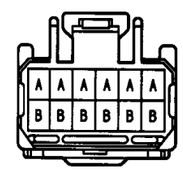

(HINT:SEE PAGE 7,23,39)

J16 Ⓐ BLACK

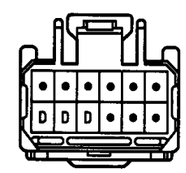

(HINT:SEE PAGE 7,23,39)

J17 Ⓑ BLACK

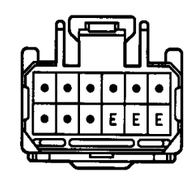

(HINT:SEE PAGE 7,23,39)

J37 Ⓐ GRAY

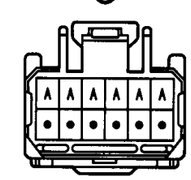

(HINT:SEE PAGE 7,23,39)

J38 Ⓑ GRAY

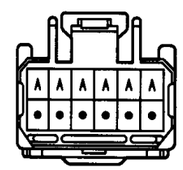

(HINT:SEE PAGE 7,23,39)

O 2 BLUE

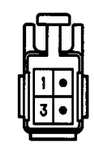

R 2 Ⓐ

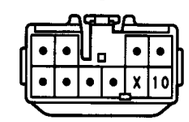

R 3 Ⓑ

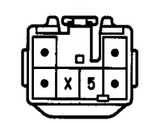

R 4 BLACK

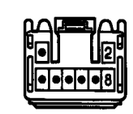

R 6

S 5 BLACK

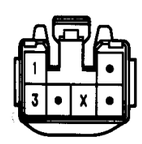

S 6 BLACK

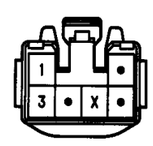

TAILLIGHT(LHD)

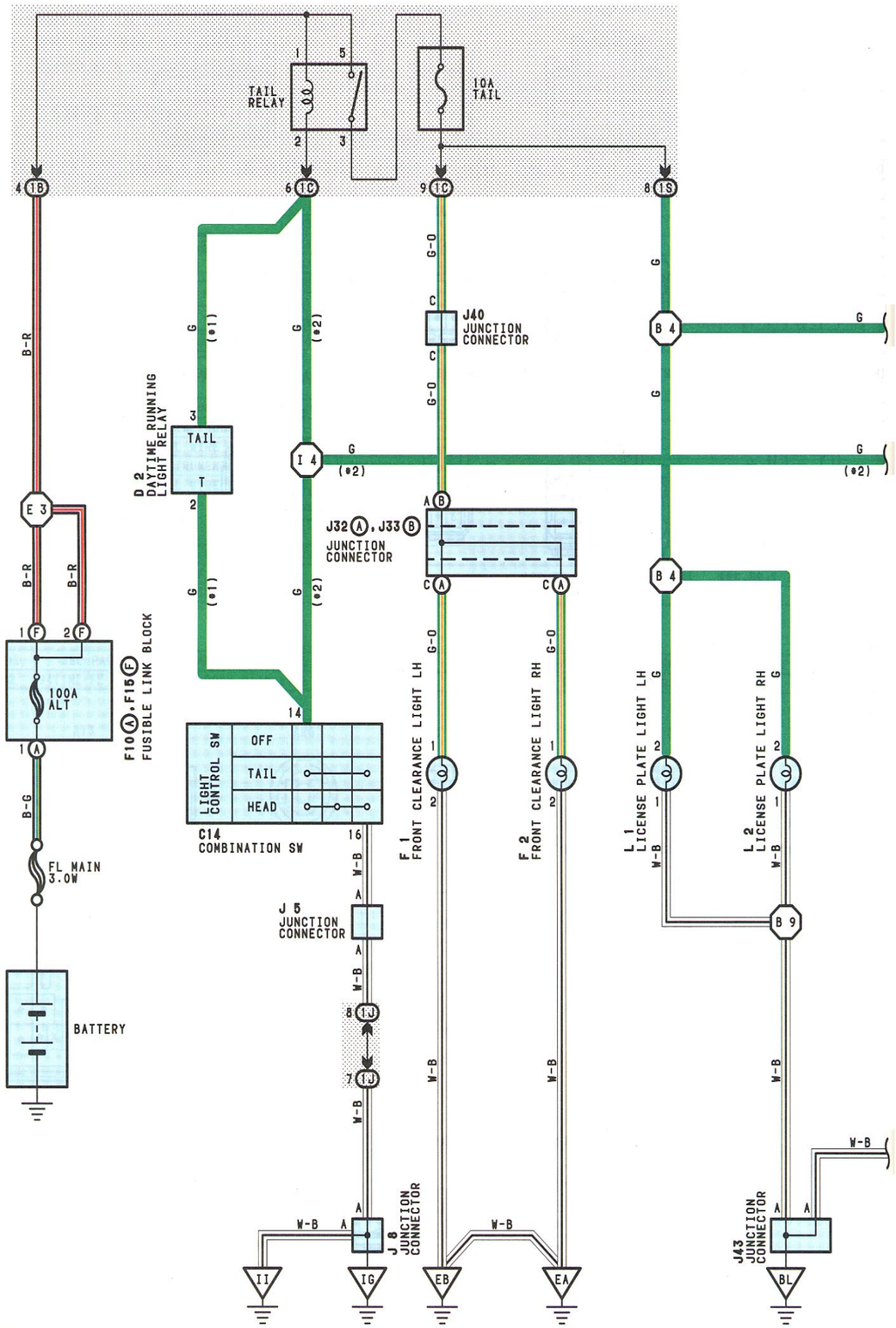

* 1:W/ DAYTIME RUNNING LIGHT
* 2:W/O DAYTIME RUNNING LIGHT

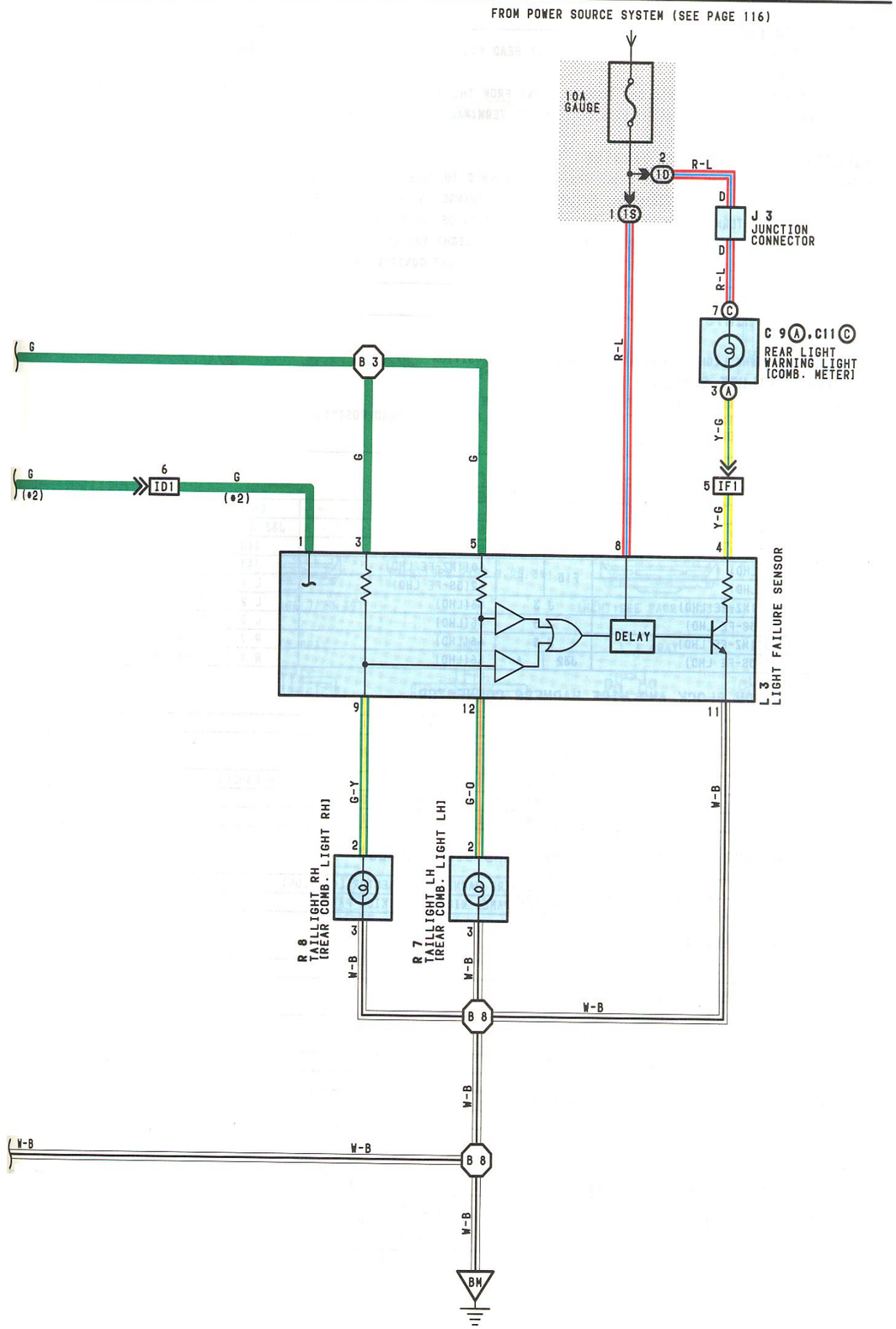

TAILLIGHT(LHD)

SYSTEM OUTLINE

WHEN THE LIGHT CONTROL SW IS TURNED TO **TAIL** OR **HEAD** POSITION, CURRENT FLOWS TO **TERMINALS 3, 5** OF THE LIGHT FAILURE SENSOR THROUGH THE **TAIL** FUSE.
WHEN THE IGNITION SW IS TURNED ON, CURRENT FLOWS FROM THE **GAUGE** FUSE TO **TERMINAL 8** OF THE LIGHT FAILURE SENSOR, AND ALSO FLOWS THROUGH THE REAR LIGHT WARNING LIGHT TO **TERMINAL 4** OF THE LIGHT FAILURE SENSOR.

TAILLIGHT DISCONNECTION WARNING

WITH THE IGNITION SW ON AND THE LIGHT CONTROL SW TURNED TO **TAIL** OR **HEAD** POSITION, IF THE TAILLIGHT CIRCUIT IS OPEN, THE LIGHT FAILURE SENSOR DETECTS THE FAILURE BY THE CHANGE IN THE CURRENT FLOWING FROM **TERMINALS 3, 5** OF THE LIGHT FAILURE SENSOR TO **TERMINALS 9, 12** AND THE WARNING CIRCUIT OF THE LIGHT FAILURE SENSOR IS ACTIVATED.
AS A RESULT, THE CURRENT FLOWS FROM **TERMINAL 4** OF THE LIGHT FAILURE SENSOR TO **TERMINAL 11** → **GROUND** AND TURNS THE REAR LIGHT WARNING LIGHT ON, WHICH REMAINS ON UNTIL THE LIGHT CONTROL SW IS TURNED OFF.

SERVICE HINTS

TAIL RELAY

5-3:CLOSED WITH THE LIGHT CONTROL SW AT **TAIL** OR **HEAD** POSITION

L 3 LIGHT FAILURE SENSOR

4, 8-GROUND:APPROX. 12 VOLTS WITH THE IGNITION SW AT **ON** POSITION
3, 5-GROUND:APPROX. 12 VOLTS WITH THE LIGHT CONTROL SW AT **TAIL** OR **HEAD** POSITION
11-GROUND:ALWAYS CONTINUITY

○ : PARTS LOCATION

CODE		SEE PAGE	CODE		SEE PAGE	CODE		SEE PAGE
C 9	A	64(LHD)	F10	A	60(1MZ-FE LHD)	J33	B	66(LHD)
C11	C	64(LHD)			62(5S-FE LHD)	J40		66(LHD)
C14		64(LHD)	F15	F	60(1MZ-FE LHD)	J43		68(LHD)
D 2		64(LHD)			62(5S-FE LHD)	L 1		68(LHD)
F 1		60(1MZ-FE LHD)	J 3		66(LHD)	L 2		68(LHD)
		62(5S-FE LHD)	J 5		66(LHD)	L 3		68(LHD)
F 2		60(1MZ-FE LHD)	J 8		66(LHD)	R 7		68(LHD)
		62(5S-FE LHD)	J32	A	66(LHD)	R 8		68(LHD)

: JUNCTION BLOCK AND WIRE HARNESS CONNECTOR

CODE	SEE PAGE	JUNCTION BLOCK AND WIRE HARNESS (CONNECTOR LOCATION)
1B	52(LHD)	COWL WIRE AND INSTRUMENT PANEL J/B (LOWER FINISH PANEL)
1C		
1D	52(LHD)	INSTRUMENT PANEL WIRE AND INSTRUMENT PANEL J/B (LOWER FINISH PANEL)
1J	52(LHD)	COWL WIRE AND INSTRUMENT PANEL J/B (LOWER FINISH PANEL)
1S	52(LHD)	FLOOR WIRE AND INSTRUMENT PANEL J/B (LOWER FINISH PANEL)

▭ : CONNECTOR JOINING WIRE HARNESS AND WIRE HARNESS

CODE	SEE PAGE	JOINING WIRE HARNESS AND WIRE HARNESS (CONNECTOR LOCATION)
IF1	86(LHD)	FLOOR WIRE AND INSTRUMENT PANEL WIRE (LEFT KICK PANEL)

▽ : GROUND POINTS

CODE	SEE PAGE	GROUND POINTS LOCATION
EA	82(1MZ-FE LHD)	BEHIND HEADLIGHT RH
	84(5S-FE LHD)	
EB	82(1MZ-FE LHD)	BEHIND HEADLIGHT LH
	84(5S-FE LHD)	
IG	86(LHD)	INSTRUMENT PANEL BRACE LH
II	86(LHD)	COWL SIDE PANEL RH
BL	90(LHD)	UNDER THE LEFT CENTER PILLAR
BM	90(LHD)	BACK PANEL CENTER

⬡ : SPLICE POINTS

CODE	SEE PAGE	WIRE HARNESS WITH SPLICE POINTS	CODE	SEE PAGE	WIRE HARNESS WITH SPLICE POINTS
E 3	82(1MZ-FE LHD)	COWL WIRE	B 4	90(LHD)	FLOOR WIRE
	84(5S-FE LHD)		B 8		
I 4	88(LHD)		B 9		
B 3	90(LHD)	FLOOR WIRE			

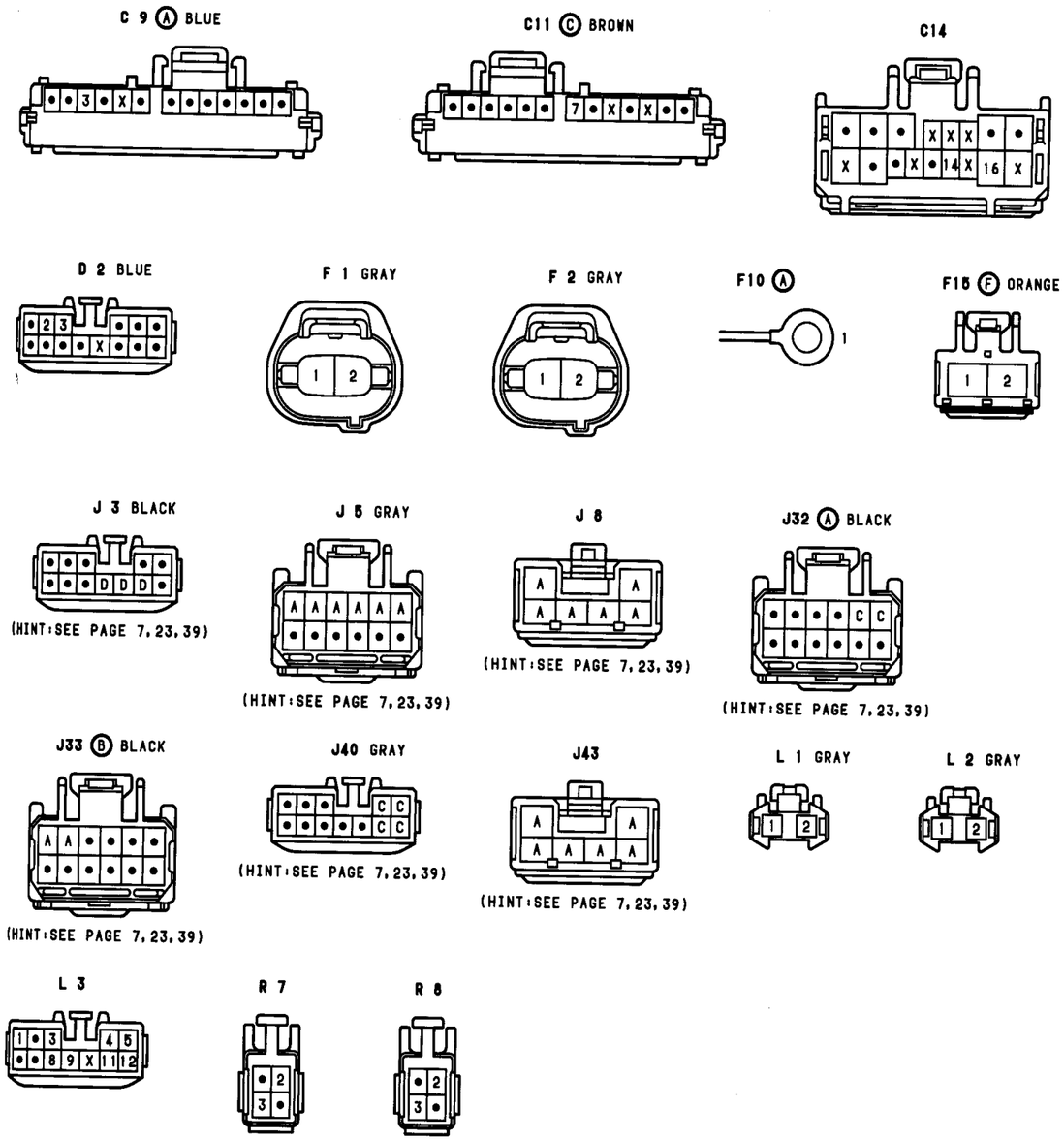

INTERIOR LIGHT(LHD)

FROM POWER SOURCE SYSTEM (SEE PAGE 116)

* 1:W/ MOON ROOF
* 2:W/O MOON ROOF

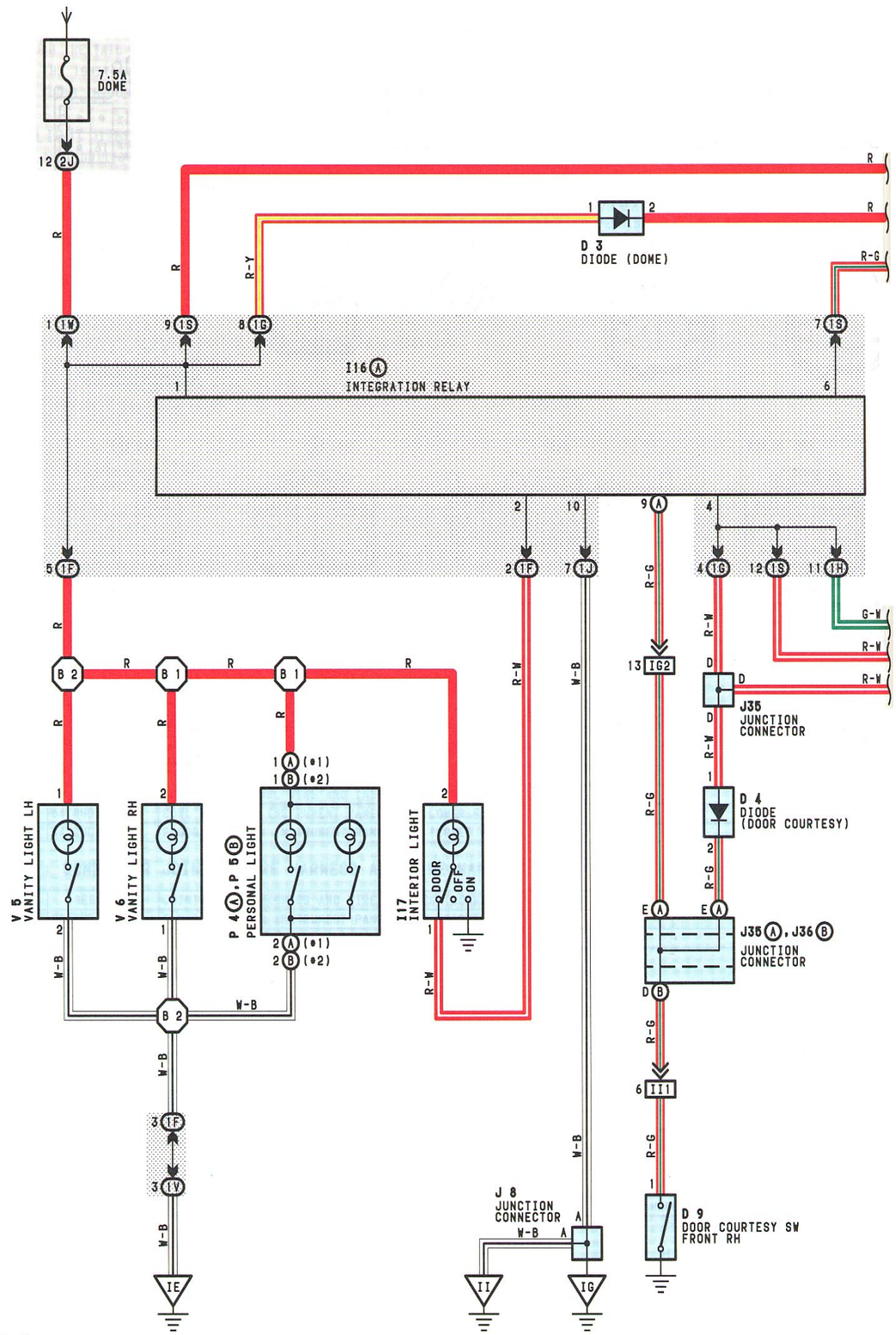

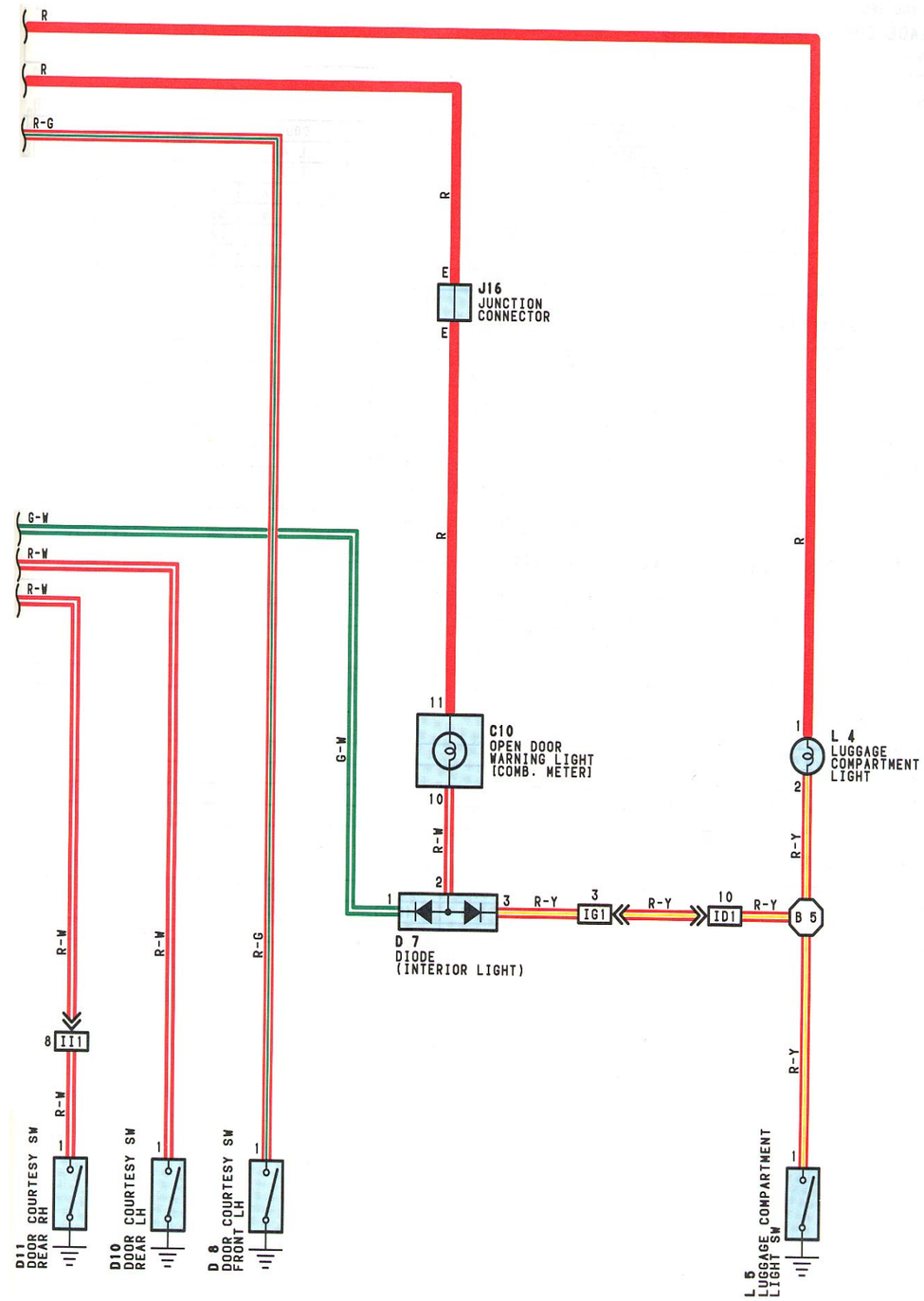

INTERIOR LIGHT(LHD)

SERVICE HINTS

INTEGRATION RELAY

1-GROUND:ALWAYS APPROX. 12 VOLTS
4-GROUND:CONTINUITY WITH THE ONE OF EACH DOOR (FRONT RH, REAR LH AND RH) OPEN
6-GROUND:CONTINUITY WITH THE FRONT LH DOOR OPEN
10-GROUND:ALWAYS CONTINUITY

D 8,D 9,D10,D11 DOOR COURTESY SW FRONT LH, RH, REAR LH, RH

1-GROUND:CLOSED WITH THE DOOR OPEN

L 5 LUGGAGE COMPARTMENT LIGHT SW

1-GROUND:CLOSED WITH THE LUGGAGE COMPARTMENT DOOR OPEN

○ : PARTS LOCATION

CODE	SEE PAGE	CODE	SEE PAGE	CODE	SEE PAGE
C10	64(LHD)	D11	68(LHD)	L 4	68(LHD)
D 3	64(LHD)	I16 A	64(LHD)	L 5	68(LHD)
D 4	64(LHD)	I17	68(LHD)	P 4 A	68(LHD)
D 7	68(LHD)	J 8	66(LHD)	P 5 B	68(LHD)
D 8	68(LHD)	J16	66(LHD)	V 5	68(LHD)
D 9	68(LHD)	J35 A	66(LHD)	V 6	68(LHD)
D10	68(LHD)	J36 B	66(LHD)		

: JUNCTION BLOCK AND WIRE HARNESS CONNECTOR

CODE	SEE PAGE	JUNCTION BLOCK AND WIRE HARNESS (CONNECTOR LOCATION)
1F	52(LHD)	ROOF WIRE AND INSTRUMENT PANEL J/B (LOWER FINISH PANEL)
1G	52(LHD)	INSTRUMENT PANEL WIRE AND INSTRUMENT PANEL J/B (LOWER FINISH PANEL)
1H		
1J	52(LHD)	COWL WIRE AND INSTRUMENT PANEL J/B (LOWER FINISH PANEL)
1S	52(LHD)	FLOOR WIRE AND INSTRUMENT PANEL J/B (LOWER FINISH PANEL)
1V	52(LHD)	COWL WIRE AND INSTRUMENT PANEL J/B (LOWER FINISH PANEL)
1W		
2J	56	COWL WIRE AND ENGINE ROOM J/B NO.2 (ENGINE COMPARTMENT LEFT)

□ : CONNECTOR JOINING WIRE HARNESS AND WIRE HARNESS

CODE	SEE PAGE	JOINING WIRE HARNESS AND WIRE HARNESS (CONNECTOR LOCATION)
ID1	86(LHD)	FLOOR WIRE AND COWL WIRE (LEFT KICK PANEL)
IG1	86(LHD)	INSTRUMENT PANEL WIRE AND COWL WIRE (LOWER FINISH PANEL)
IG2		
II1	88(LHD)	FLOOR NO.2 WIRE AND INSTRUMENT PANEL WIRE (RIGHT KICK PANEL)

▽ : GROUND POINTS

CODE	SEE PAGE	GROUND POINTS LOCATION
IE	86(LHD)	COWL SIDE PANEL LH
IG	86(LHD)	INSTRUMENT PANEL BRACE LH
II	86(LHD)	COWL SIDE PANEL RH

⬡ : SPLICE POINTS

CODE	SEE PAGE	WIRE HARNESS WITH SPLICE POINTS	CODE	SEE PAGE	WIRE HARNESS WITH SPLICE POINTS
B 1	90(LHD)	ROOF WIRE	B 5	90(LHD)	FLOOR WIRE
B 2					

* 1:W/ MOON ROOF
* 2:W/O MOON ROOF

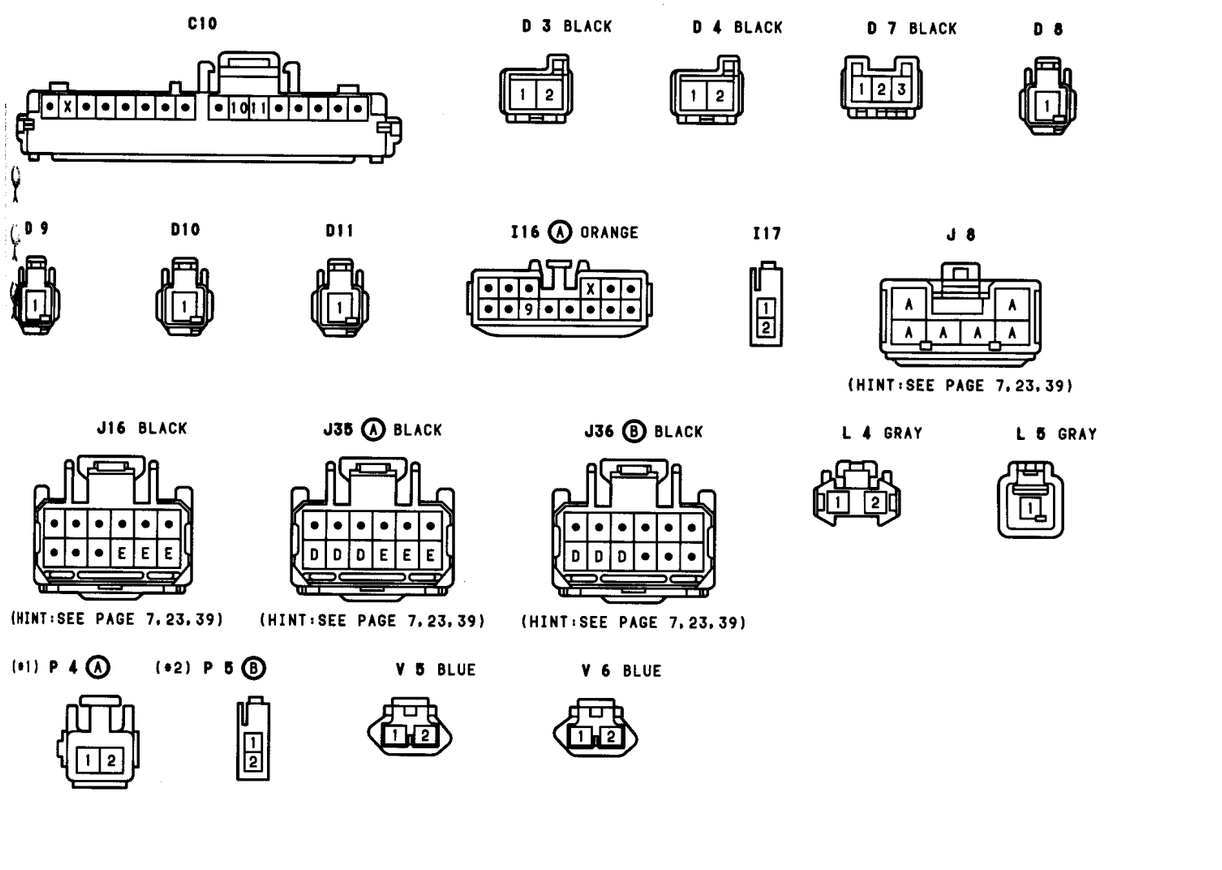

STOP LIGHT(LHD)

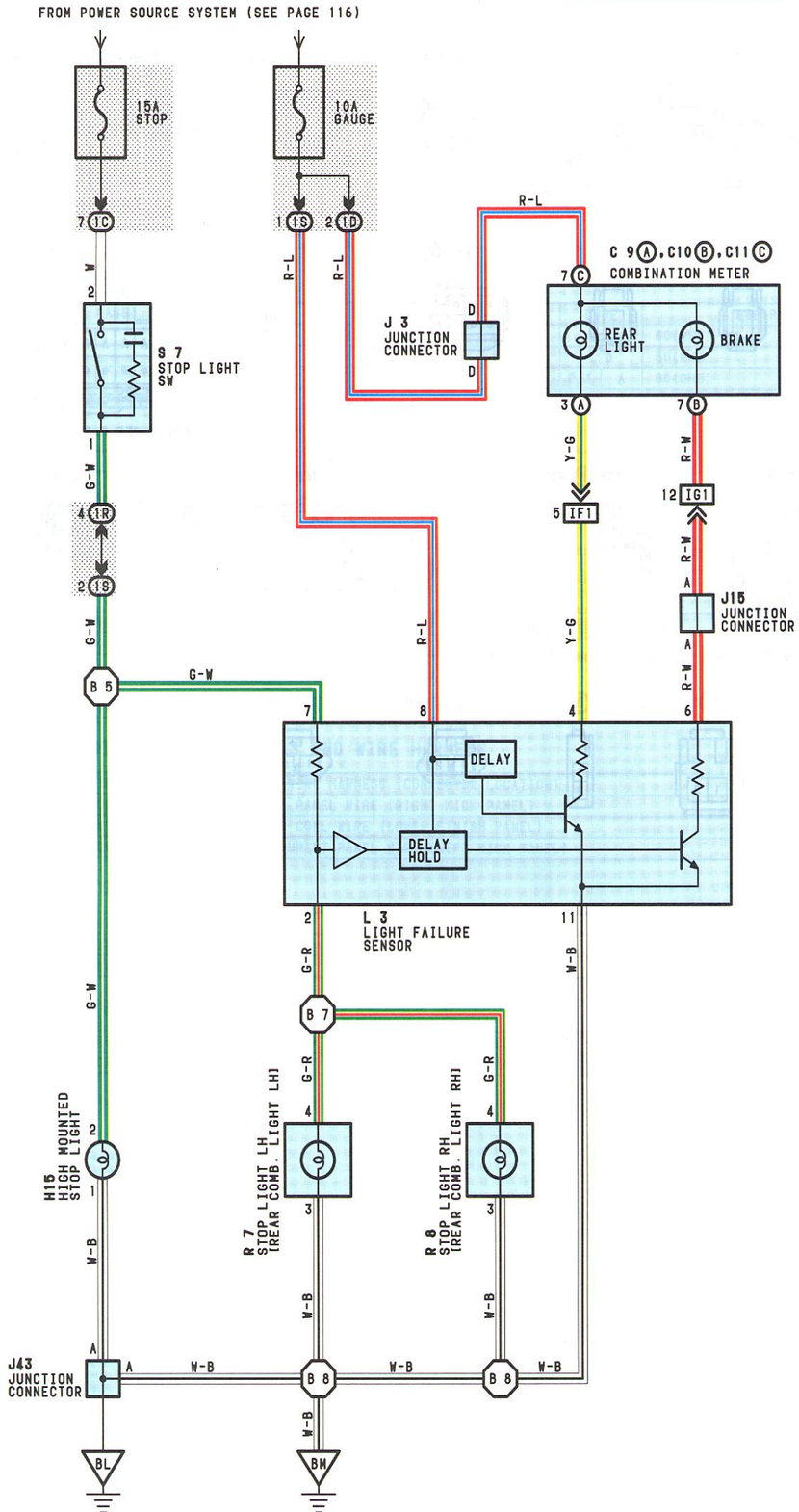

SYSTEM OUTLINE

CURRENT IS APPLIED AT ALL TIMES THROUGH THE **STOP** FUSE TO **TERMINAL 2** OF THE STOP LIGHT SW.
WHEN THE IGNITION SW IS TURNED ON, CURRENT FLOWS FROM THE **GAUGE** FUSE TO **TERMINAL 8** OF THE LIGHT FAILURE SENSOR, AND ALSO FLOWS THROUGH THE REAR LIGHT WARNING LIGHT TO **TERMINAL 4** OF THE LIGHT FAILURE SENSOR.

STOP LIGHT DISCONNECTION WARNING

WHEN THE IGNITION SW IS TURNED ON AND THE BRAKE PEDAL IS PRESSED (STOP LIGHT SW ON), IF THE STOP LIGHT CIRCUIT IS OPEN, THE CURRENT FLOWING FROM **TERMINAL 7** OF THE LIGHT FAILURE SENSOR TO **TERMINAL 2** CHANGES, SO THE LIGHT FAILURE SENSOR DETECTS THE DISCONNECTION AND THE WARNING CIRCUIT OF THE LIGHT FAILURE SENSOR IS ACTIVATED.
AS A RESULT, THE CURRENT FLOWS FROM **TERMINAL 4** OF THE LIGHT FAILURE SENSOR → **TERMINAL 11** → **GROUND** AND TURNS THE REAR LIGHT WARNING LIGHT ON. BY PRESSING THE BRAKE PEDAL, THE CURRENT FLOWING TO **TERMINAL 8** OF THE LIGHT FAILURE SENSOR KEEPS THE WARNING CIRCUIT ON AND HOLDS THE WARNING LIGHT ON UNTIL THE IGNITION SW IS TURNED OFF.

SERVICE HINTS

S 7 STOP LIGHT SW

2-1: CLOSED WITH THE BRAKE PEDAL DEPRESSED

L 3 LIGHT FAILURE SENSOR

7-GROUND: APPROX. 12 VOLTS WITH THE STOP LIGHT SW ON
4, 8-GROUND: APPROX. 12 VOLTS WITH THE IGNITION SW AT **ON** POSITION
11-GROUND: ALWAYS CONTINUITY

: PARTS LOCATION

CODE		SEE PAGE	CODE	SEE PAGE	CODE	SEE PAGE
C 9	A	64(LHD)	J 3	66(LHD)	R 7	68(LHD)
C10	B	64(LHD)	J15	66(LHD)	R 8	68(LHD)
C11	C	64(LHD)	J43	68(LHD)	S 7	66(LHD)
H15		68(LHD)	L 3	68(LHD)		

: JUNCTION BLOCK AND WIRE HARNESS CONNECTOR

CODE	SEE PAGE	JUNCTION BLOCK AND WIRE HARNESS (CONNECTOR LOCATION)
1C	52(LHD)	COWL WIRE AND INSTRUMENT PANEL J/B (LOWER FINISH PANEL)
1D	52(LHD)	INSTRUMENT PANEL WIRE AND INSTRUMENT PANEL J/B (LOWER FINISH PANEL)
1R	52(LHD)	COWL WIRE AND INSTRUMENT PANEL J/B (LOWER FINISH PANEL)
1S	52(LHD)	FLOOR WIRE AND INSTRUMENT PANEL J/B (LOWER FINISH PANEL)

: CONNECTOR JOINING WIRE HARNESS AND WIRE HARNESS

CODE	SEE PAGE	JOINING WIRE HARNESS AND WIRE HARNESS (CONNECTOR LOCATION)
IF1	86(LHD)	FLOOR WIRE AND INSTRUMENT PANEL WIRE (LEFT KICK PANEL)
IG1	86(LHD)	INSTRUMENT PANEL WIRE AND COWL WIRE (LOWER FINISH PANEL)

: GROUND POINTS

CODE	SEE PAGE	GROUND POINTS LOCATION
BL	90(LHD)	UNDER THE LEFT CENTER PILLAR
BM	90(LHD)	BACK PANEL CENTER

: SPLICE POINTS

CODE	SEE PAGE	WIRE HARNESS WITH SPLICE POINTS	CODE	SEE PAGE	WIRE HARNESS WITH SPLICE POINTS
B 5	90(LHD)	FLOOR WIRE	B 8	90(LHD)	FLOOR WIRE
B 7					

STOP LIGHT(LHD)

C 9 (A) BLUE

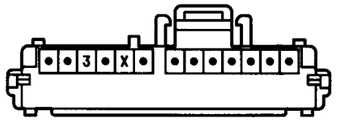

C10 (B)

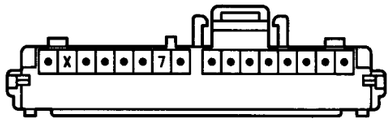

C11 (C) BROWN

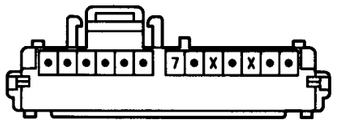

H15

J 3 BLACK

(HINT:SEE PAGE 7,23,39)

J15

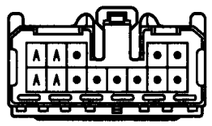

(HINT:SEE PAGE 7,23,39)

J43

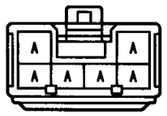

(HINT:SEE PAGE 7,23,39)

L 3

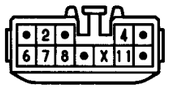

R 7

R 8

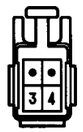

S 7 BLUE

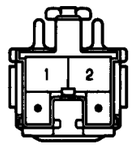

BACK-UP LIGHT(LHD)

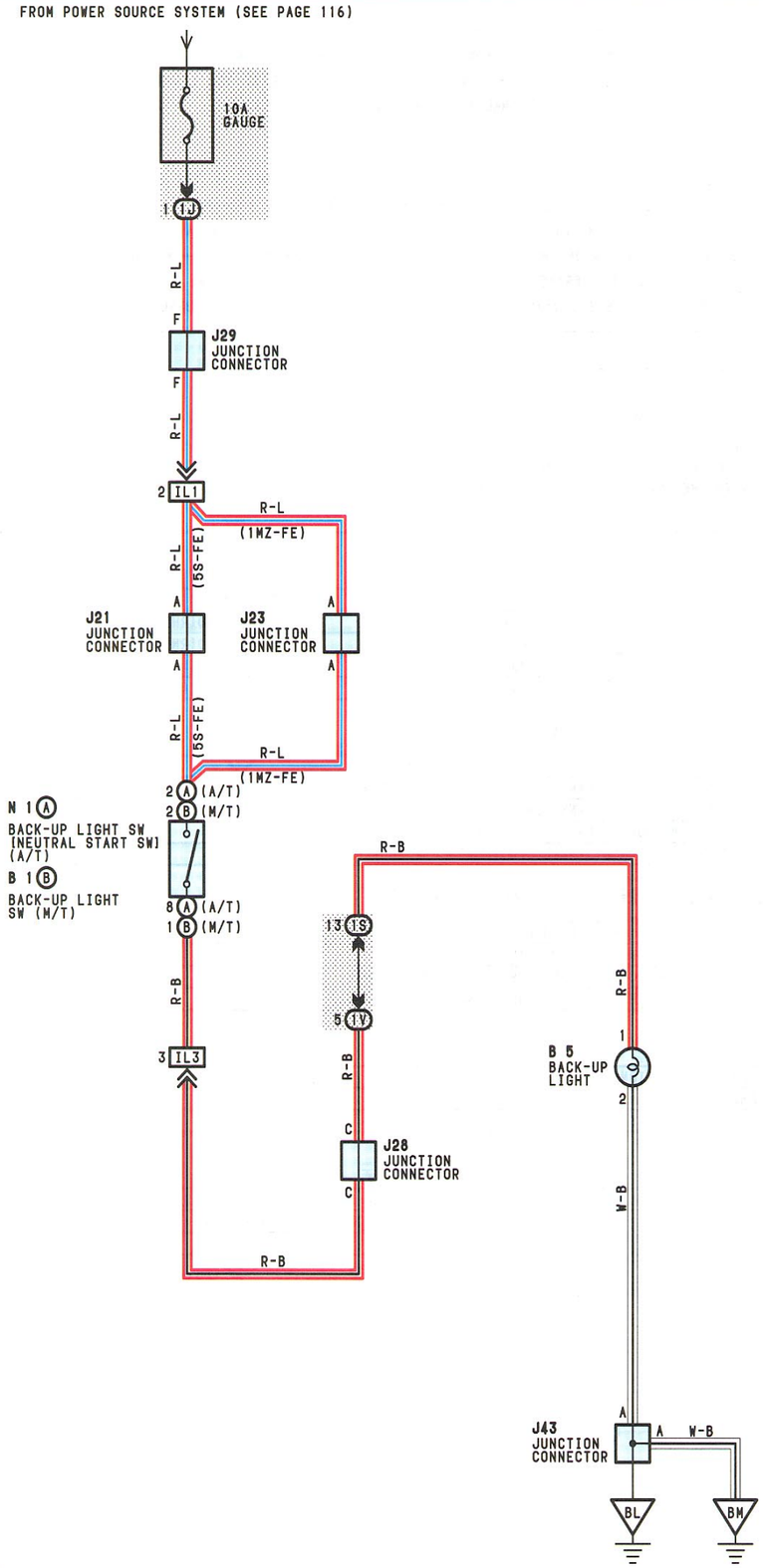

SERVICE HINTS

N 1 Ⓐ **BACK-UP LIGHT SW (NEUTRAL START SW) (A/T)**

2-8:CLOSED WITH THE SHIFT LEVER AT R POSITION

B 1 Ⓑ **BACK-UP LIGHT SW (M/T)**

2-1:CLOSED WITH THE SHIFT LEVER AT R POSITION

○ : PARTS LOCATION

CODE		SEE PAGE	CODE	SEE PAGE	CODE		SEE PAGE
B 1	B	62(5S-FE LHD)	J23	66(LHD)	J43		68(LHD)
B 5		68(LHD)	J28	66(LHD)	N 1	A	60(1MZ-FE LHD)
J21		66(LHD)	J29	66(LHD)			62(5S-FE LHD)

: JUNCTION BLOCK AND WIRE HARNESS CONNECTOR

CODE	SEE PAGE	JUNCTION BLOCK AND WIRE HARNESS (CONNECTOR LOCATION)
1J	52(LHD)	COWL WIRE AND INSTRUMENT PANEL J/B (LOWER FINISH PANEL)
1S	52(LHD)	FLOOR WIRE AND INSTRUMENT PANEL J/B (LOWER FINISH PANEL)
1Y	52(LHD)	COWL WIRE AND INSTRUMENT PANEL J/B (LOWER FINISH PANEL)

: CONNECTOR JOINING WIRE HARNESS AND WIRE HARNESS

CODE	SEE PAGE	JOINING WIRE HARNESS AND WIRE HARNESS (CONNECTOR LOCATION)
IL1	88(LHD)	ENGINE WIRE AND COWL WIRE (UNDER THE BLOWER MOTOR)
IL3		

▽ : GROUND POINTS

CODE	SEE PAGE	GROUND POINTS LOCATION
BL	90(LHD)	UNDER THE LEFT CENTER PILLAR
BM	90(LHD)	BACK PANEL CENTER

B 1 Ⓑ GRAY

B 5

(5S-FE) J21 GRAY

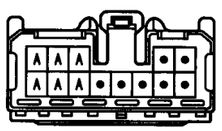

(HINT:SEE PAGE 7,23,39)

(1MZ-FE) J23

(HINT:SEE PAGE 7,23,39)

J28

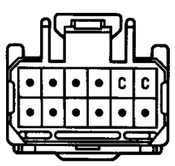

(HINT:SEE PAGE 7,23,39)

J29

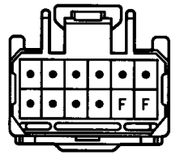

(HINT:SEE PAGE 7,23,39)

J43

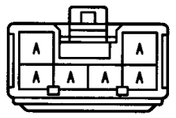

(HINT:SEE PAGE 7,23,39)

N 1 Ⓐ GRAY

CIGARETTE LIGHTER AND CLOCK(LHD)

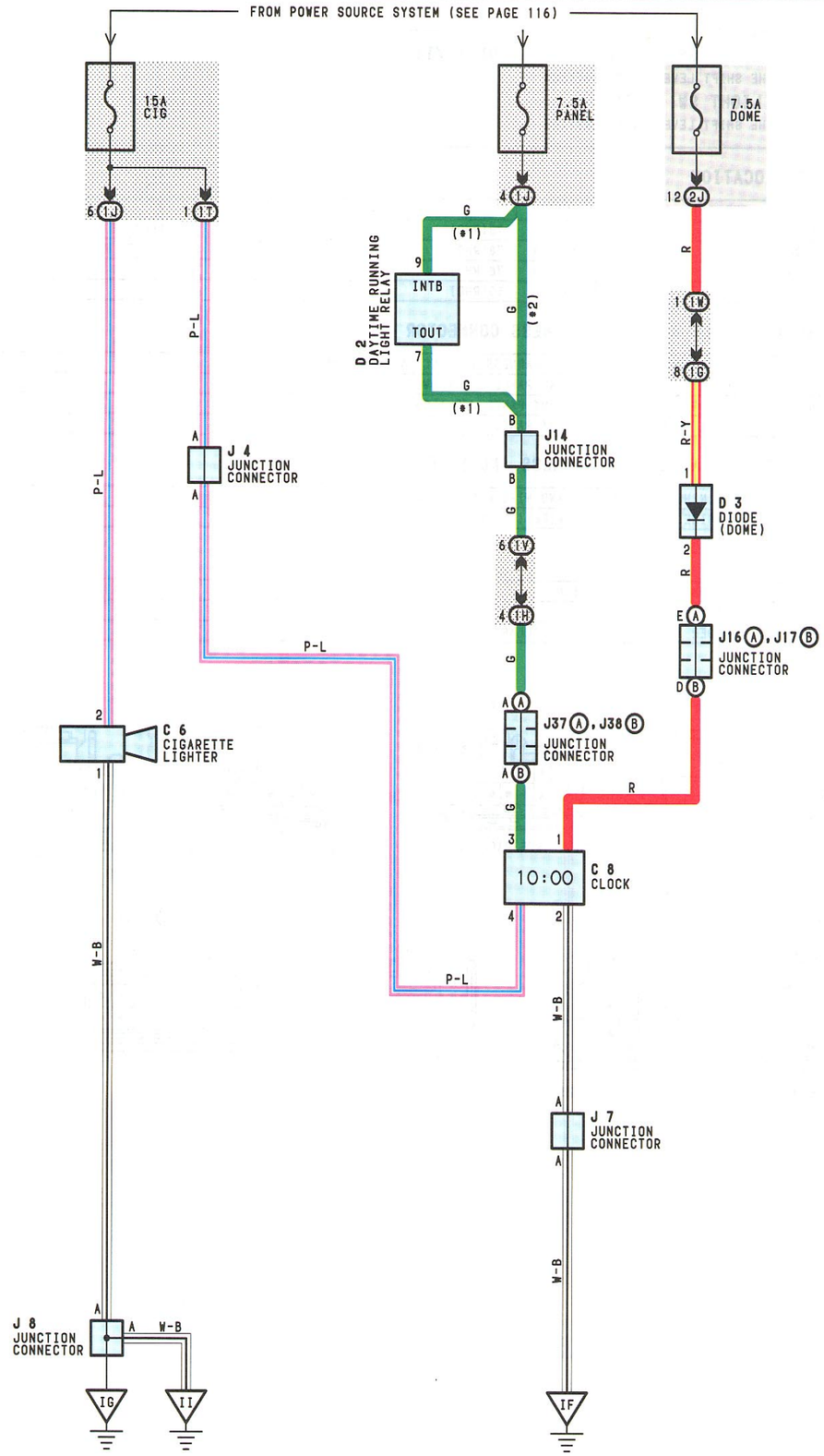

SERVICE HINTS

C 6 CIGARETTE LIGHTER

2-GROUND:APPROX. 12 VOLTS WITH THE IGNITION SW AT ACC OR ON POSITION
1-GROUND:ALWAYS CONTINUITY

C 8 CLOCK

4-GROUND:APPROX. 12 VOLTS WITH THE IGNITION SW AT ACC OR ON POSITION
1-GROUND:ALWAYS APPROX. 12 VOLTS
2-GROUND:ALWAYS CONTINUITY
3-GROUND:APPROX. 12 VOLTS WITH THE LIGHT CONTROL SW AT TAIL OR HEAD POSITION

○ : PARTS LOCATION

CODE	SEE PAGE	CODE	SEE PAGE	CODE		SEE PAGE
C 6	64(LHD)	J 4	66(LHD)	J16	A	66(LHD)
C 8	64(LHD)	J 7	66(LHD)	J17	B	66(LHD)
D 2	64(LHD)	J 8	66(LHD)	J37	A	66(LHD)
D 3	64(LHD)	J14	66(LHD)	J38	B	66(LHD)

: JUNCTION BLOCK AND WIRE HARNESS CONNECTOR

CODE	SEE PAGE	JUNCTION BLOCK AND WIRE HARNESS (CONNECTOR LOCATION)
1G	52(LHD)	INSTRUMENT PANEL WIRE AND INSTRUMENT PANEL J/B (LOWER FINISH PANEL)
1H		
1J	52(LHD)	COWL WIRE AND INSTRUMENT PANEL J/B (LOWER FINISH PANEL)
1T	52(LHD)	INSTRUMENT PANEL WIRE AND INSTRUMENT PANEL J/B (LOWER FINISH PANEL)
1V	52(LHD)	COWL WIRE AND INSTRUMENT PANEL J/B (LOWER FINISH PANEL)
1W		
2J	56	COWL WIRE AND ENGINE ROOM J/B NO.2 (ENGINE COMPARTMENT LEFT)

▽ : GROUND POINTS

CODE	SEE PAGE	GROUND POINTS LOCATION
IF	86(LHD)	LEFT KICK PANEL
IG	86(LHD)	INSTRUMENT PANEL BRACE LH
II	86(LHD)	COWL SIDE PANEL RH

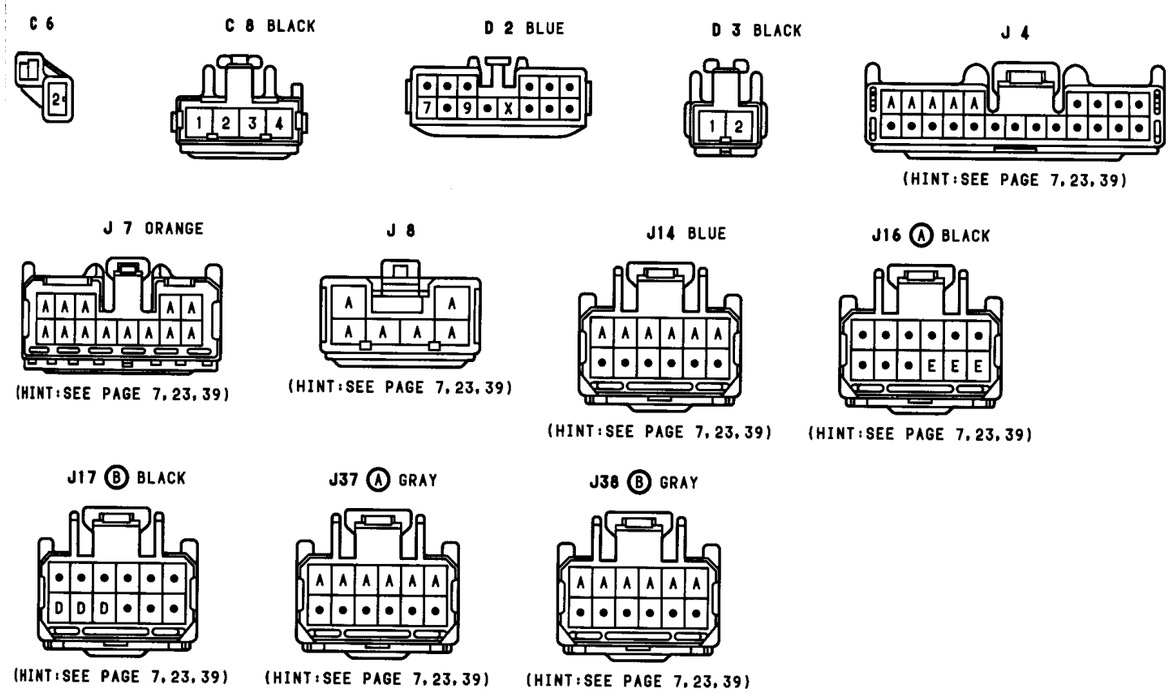

POWER OUTLET(LHD)

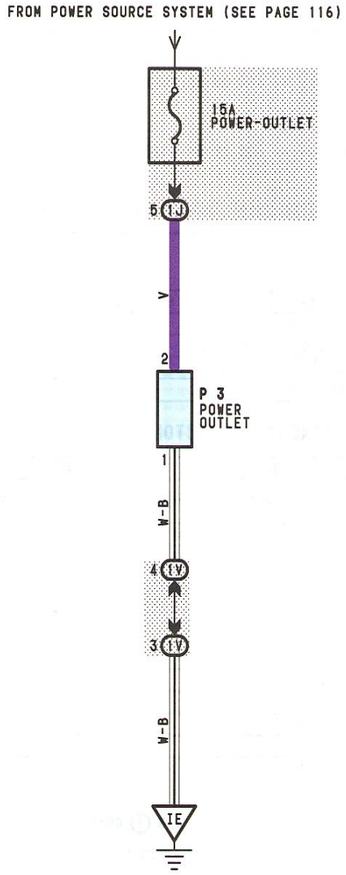

SERVICE HINTS

P 3 POWER OUTLET

2-GROUND:APPROX. 12 VOLTS WITH THE IGNITION SW AT **ACC** OR **ON** POSITION
1-GROUND:ALWAYS CONTINUITY

○ : PARTS LOCATION

CODE	SEE PAGE	CODE	SEE PAGE	CODE	SEE PAGE
P 3	66(LHD)				

⬭ : JUNCTION BLOCK AND WIRE HARNESS CONNECTOR

CODE	SEE PAGE	JUNCTION BLOCK AND WIRE HARNESS (CONNECTOR LOCATION)
1J	52(LHD)	COWL WIRE AND INSTRUMENT PANEL J/B (LOWER FINISH PANEL)
1V		

▽ : GROUND POINTS

CODE	SEE PAGE	GROUND POINTS LOCATION
IE	86(LHD)	COWL SIDE PANEL LH

P 3 ORANGE

HORN(LHD)

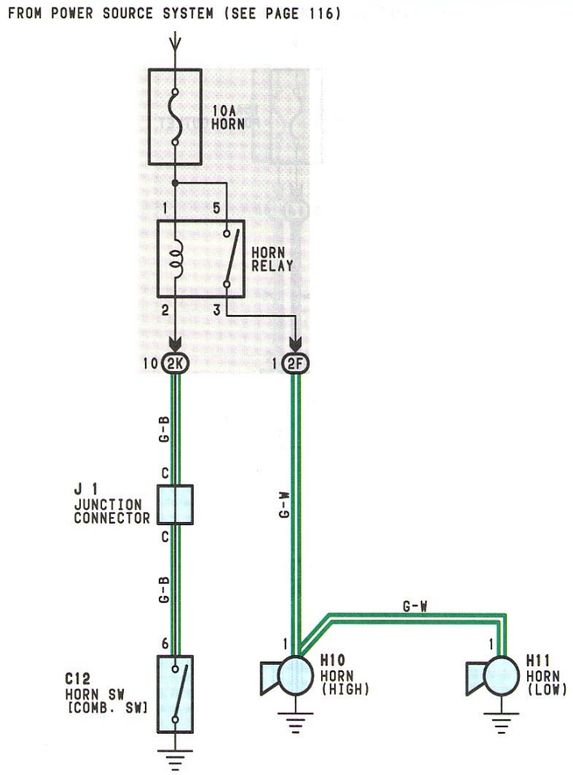

SERVICE HINTS

HORN RELAY

5-3:CLOSED WITH THE HORN SW [COMB. SW] ON

○ : PARTS LOCATION

CODE	SEE PAGE	CODE	SEE PAGE	CODE	SEE PAGE
C12	64(LHD)	H10	62(5S-FE LHD)	H11	62(5S-FE LHD)
H10	60(1MZ-FE LHD)	H11	60(1MZ-FE LHD)	J 1	66(LHD)

◯ : JUNCTION BLOCK AND WIRE HARNESS CONNECTOR

CODE	SEE PAGE	JUNCTION BLOCK AND WIRE HARNESS (CONNECTOR LOCATION)
2F	56	ENGINE ROOM MAIN WIRE AND ENGINE ROOM J/B NO.2 (ENGINE COMPARTMENT LEFT)
2K	56	COWL WIRE AND ENGINE ROOM J/B NO.2 (ENGINE COMPARTMENT LEFT)

C12

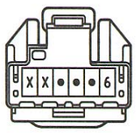

H10 BLACK

H11 BLACK

J 1 BLACK

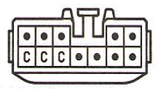

(HINT:SEE PAGE 7,23,39)

FRONT WIPER AND WASHER(LHD)

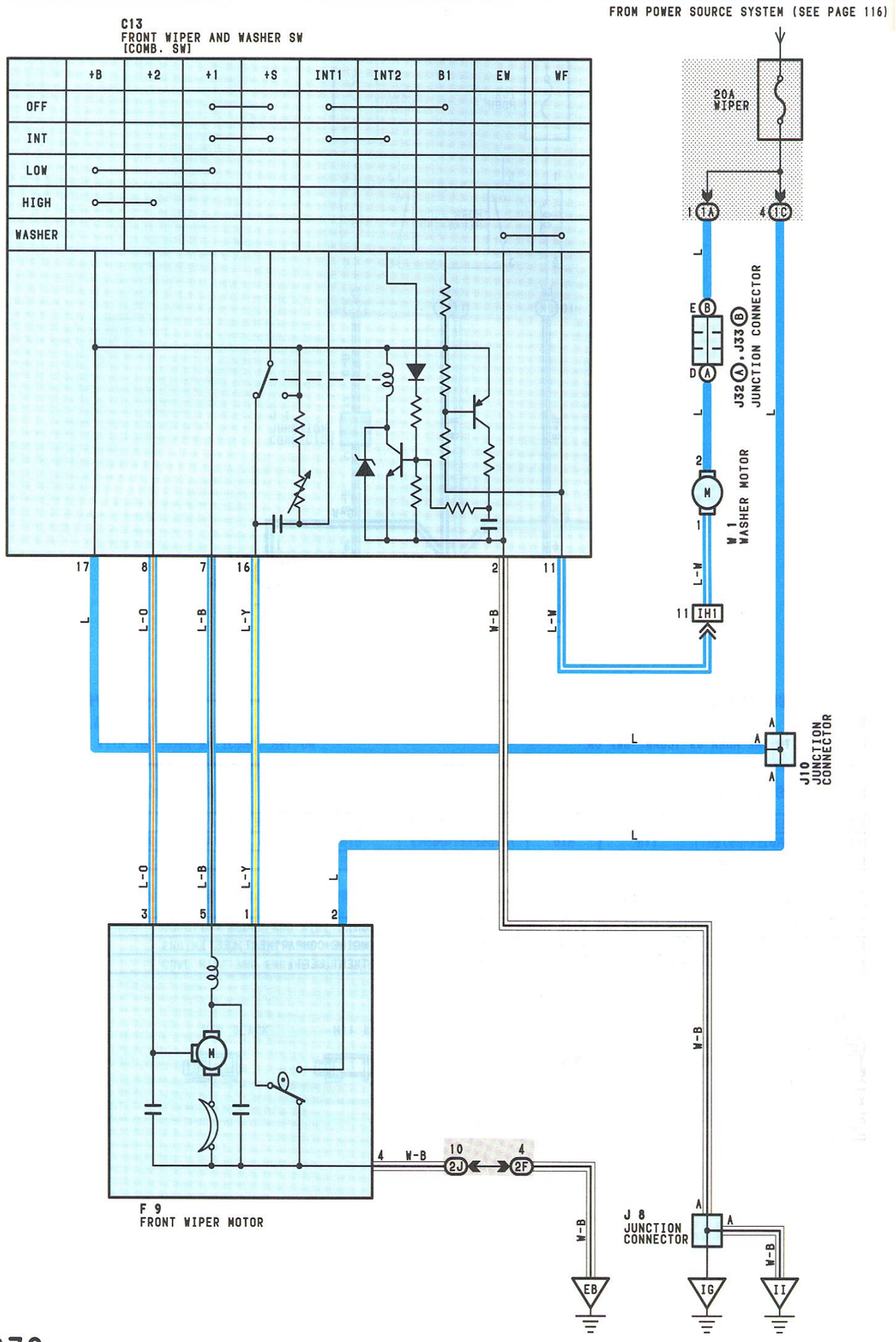

SYSTEM OUTLINE

WITH THE IGNITION SW TURNED ON, CURRENT FLOWS TO **TERMINAL 17** OF THE FRONT WIPER AND WASHER SW, **TERMINAL 2** OF THE WASHER MOTOR AND **TERMINAL 2** OF THE FRONT WIPER MOTOR THROUGH THE **WIPER** FUSE.

1. LOW SPEED POSITION

WITH THE WIPER SW TURNED TO **LOW** POSITION, CURRENT FLOWS THROUGH **TERMINAL 17** OF THE FRONT WIPER AND WASHER SW TO **TERMINAL 7** → **TERMINAL 5** OF THE FRONT WIPER MOTOR → **TERMINAL 4** → **GROUND** AND CAUSES THE WIPER MOTOR TO RUN AT LOW SPEED.

2. HIGH SPEED POSITION

WITH THE WIPER SW TURNED TO **HIGH** POSITION, CURRENT FLOWS THROUGH **TERMINAL 17** OF THE FRONT WIPER AND WASHER SW TO **TERMINAL 8** → **TERMINAL 3** OF THE FRONT WIPER MOTOR → **TERMINAL 4** → **GROUND** AND CAUSES THE WIPER MOTOR TO RUN AT HIGH SPEED.

3. INT POSITION

WITH THE WIPER SW TURNED TO **INT** POSITION, THE RELAY OPERATES AND THE CURRENT WHICH IS CONNECTED BY RELAY FUNCTION FLOWS THROUGH **TERMINAL 17** OF THE FRONT WIPER AND WASHER SW TO **TERMINAL 2** → **GROUND**. THIS FLOW OF CURRENT OPERATES THE INTERMITTENT CIRCUIT AND THE CURRENT FLOWS THROUGH **TERMINAL 17** OF THE FRONT WIPER AND WASHER SW TO **TERMINAL 7** → **TERMINAL 5** OF THE FRONT WIPER MOTOR → **TERMINAL 4** → **GROUND** AND THE WIPER FUNCTIONS.
THE INTERMITTENT OPERATION IS CONTROLLED BY A CONDENSER'S CHARGED AND DISCHARGED FUNCTION INSTALLED IN THE RELAY AND THE INTERMITTENT TIME IS CONTROLLED BY A TIME CONTROL SW TO CHARGE THE CHARGING TIME OF CONDENSER.

4. WASHER CONTINUOUS OPERATION

WITH THE WASHER SW TURNED TO ON, THE CURRENT FLOWS THROUGH **TERMINAL 2** OF THE WASHER MOTOR TO **TERMINAL 1** → **TERMINAL 11** OF THE FRONT WIPER AND WASHER SW → **TERMINAL 2** → **GROUND** AND CAUSES THE WASHER MOTOR TO RUN AND THE WINDOW WASHER TO JET. THIS CAUSES THE CURRENT TO FLOW TO WASHER CONTINUOUS OPERATION CIRCUIT IN **TERMINAL 17** OF THE FRONT WIPER AND WASHER SW → **TERMINAL 7** → **TERMINAL 5** OF THE FRONT WIPER MOTOR → **TERMINAL 4** → **GROUND** AND THE WIPER FUNCTIONS.

SERVICE HINTS

C13 FRONT WIPER AND WASHER SW [COMB. SW]

2-GROUND:ALWAYS CONTINUITY
17-GROUND:APPROX. 12 VOLTS WITH THE IGNITION SW AT **ON** POSITION
7-GROUND:APPROX. 12 VOLTS WITH THE FRONT WIPER AND WASHER SW AT **LOW** POSITION
APPROX. 12 VOLTS 2 TO 12 SECONDS INTERMITTENTLY WITH THE FRONT WIPER AND WASHER SW AT **INT** POSITION
16-GROUND:APPROX. 12 VOLTS WITH THE IGNITION SW ON UNLESS THE FRONT WIPER MOTOR AT **STOP** POSITION
8-GROUND:APPROX. 12 VOLTS WITH THE FRONT WIPER AND WASHER SW AT **HIGH** POSITION

F 9 FRONT WIPER MOTOR

1-2:CLOSED UNLESS THE FRONT WIPER MOTOR AT **STOP** POSITION

FRONT WIPER AND WASHER(LHD)

○ : PARTS LOCATION

CODE	SEE PAGE	CODE	SEE PAGE	CODE	SEE PAGE
C13	64(LHD)	J 8	66(LHD)	J33 B	66(LHD)
F 9	60(1NZ-FE LHD)	J10	66(LHD)	W 1	60(1NZ-FE LHD)
	62(5S-FE LHD)	J32 A	66(LHD)		62(5S-FE LHD)

: JUNCTION BLOCK AND WIRE HARNESS CONNECTOR

CODE	SEE PAGE	JUNCTION BLOCK AND WIRE HARNESS (CONNECTOR LOCATION)
1A	52(LHD)	COWL WIRE AND INSTRUMENT PANEL J/B (LOWER FINISH PANEL)
1C		
2F	56	ENGINE ROOM MAIN WIRE AND ENGINE ROOM J/B NO.2 (ENGINE COMPARTMENT LEFT)
2J	56	COWL WIRE AND ENGINE ROOM J/B NO.2 (ENGINE COMPARTMENT LEFT)

: CONNECTOR JOINING WIRE HARNESS AND WIRE HARNESS

CODE	SEE PAGE	JOINING WIRE HARNESS AND WIRE HARNESS (CONNECTOR LOCATION)
IH1	86(LHD)	ENGINE ROOM MAIN WIRE AND COWL WIRE (RIGHT KICK PANEL)

▽ : GROUND POINTS

CODE	SEE PAGE	GROUND POINTS LOCATION
EB	82(1NZ-FE LHD)	BEHIND HEADLIGHT LH
	84(5S-FE LHD)	
IG	86(LHD)	INSTRUMENT PANEL BRACE LH
II	86(LHD)	COWL SIDE PANEL RH

C13 BLACK

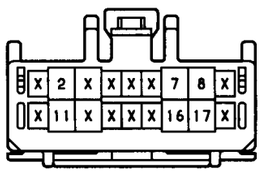

F 9 GRAY

J 8

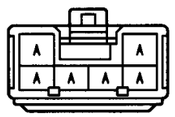

(HINT:SEE PAGE 7,23,39)

J10 BLACK

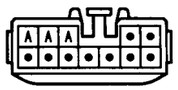

(HINT:SEE PAGE 7,23,39)

J32 Ⓐ BLACK

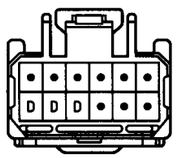

(HINT:SEE PAGE 7,23,39)

J33 Ⓑ BLACK

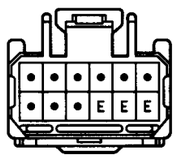

(HINT:SEE PAGE 7,23,39)

W 1 BLACK

REMOTE CONTROL MIRROR(LHD)

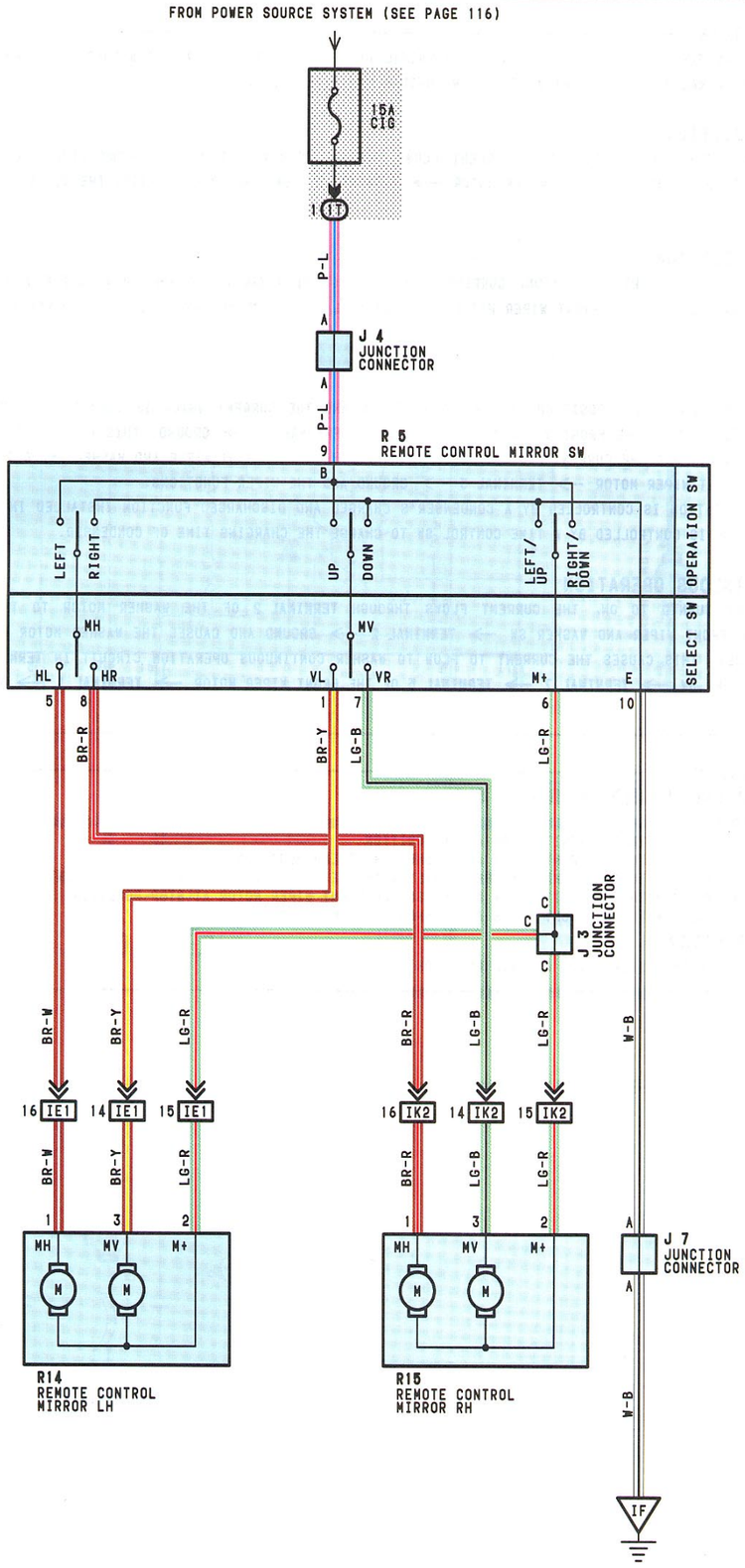

SERVICE HINTS

R 5 REMOTE CONTROL MIRROR SW

9-GROUND:APPROX. 12 VOLTS WITH THE IGNITION SW AT **ACC** OR **ON** POSITION
6-10:CONTINUITY WITH THE OPERATION SW AT **UP** OR **LEFT** POSITION
9-6:CONTINUITY WITH THE OPERATION SW AT **DOWN** OR **RIGHT** POSITION
10-GROUND:ALWAYS CONTINUITY

○ : PARTS LOCATION

CODE	SEE PAGE	CODE	SEE PAGE	CODE	SEE PAGE
J 3	66(LHD)	J 7	66(LHD)	R14	68(LHD)
J 4	66(LHD)	R 5	66(LHD)	R15	68(LHD)

: JUNCTION BLOCK AND WIRE HARNESS CONNECTOR

CODE	SEE PAGE	JUNCTION BLOCK AND WIRE HARNESS (CONNECTOR LOCATION)
1T	52(LHD)	INSTRUMENT PANEL WIRE AND INSTRUMENT PANEL J/B (LOWER FINISH PANEL)

□ : CONNECTOR JOINING WIRE HARNESS AND WIRE HARNESS

CODE	SEE PAGE	JOINING WIRE HARNESS AND WIRE HARNESS (CONNECTOR LOCATION)
IE1	86(LHD)	FRONT DOOR LH WIRE AND INSTRUMENT PANEL WIRE (LEFT KICK PANEL)
IK2	88(LHD)	FRONT DOOR RH WIRE AND INSTRUMENT PANEL WIRE (RIGHT KICK PANEL)

▽ : GROUND POINTS

CODE	SEE PAGE	GROUND POINTS LOCATION
IF	86(LHD)	LEFT KICK PANEL

J 3 BLACK

(HINT:SEE PAGE 7,23,39)

J 4

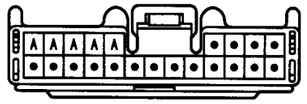

(HINT:SEE PAGE 7,23,39)

J 7 ORANGE

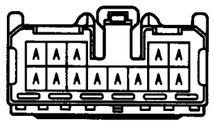

(HINT:SEE PAGE 7,23,39)

R 5

R14

R15

DOOR LOCK CONTROL(LHD)

FROM POWER SOURCE SYSTEM (SEE PAGE 116)

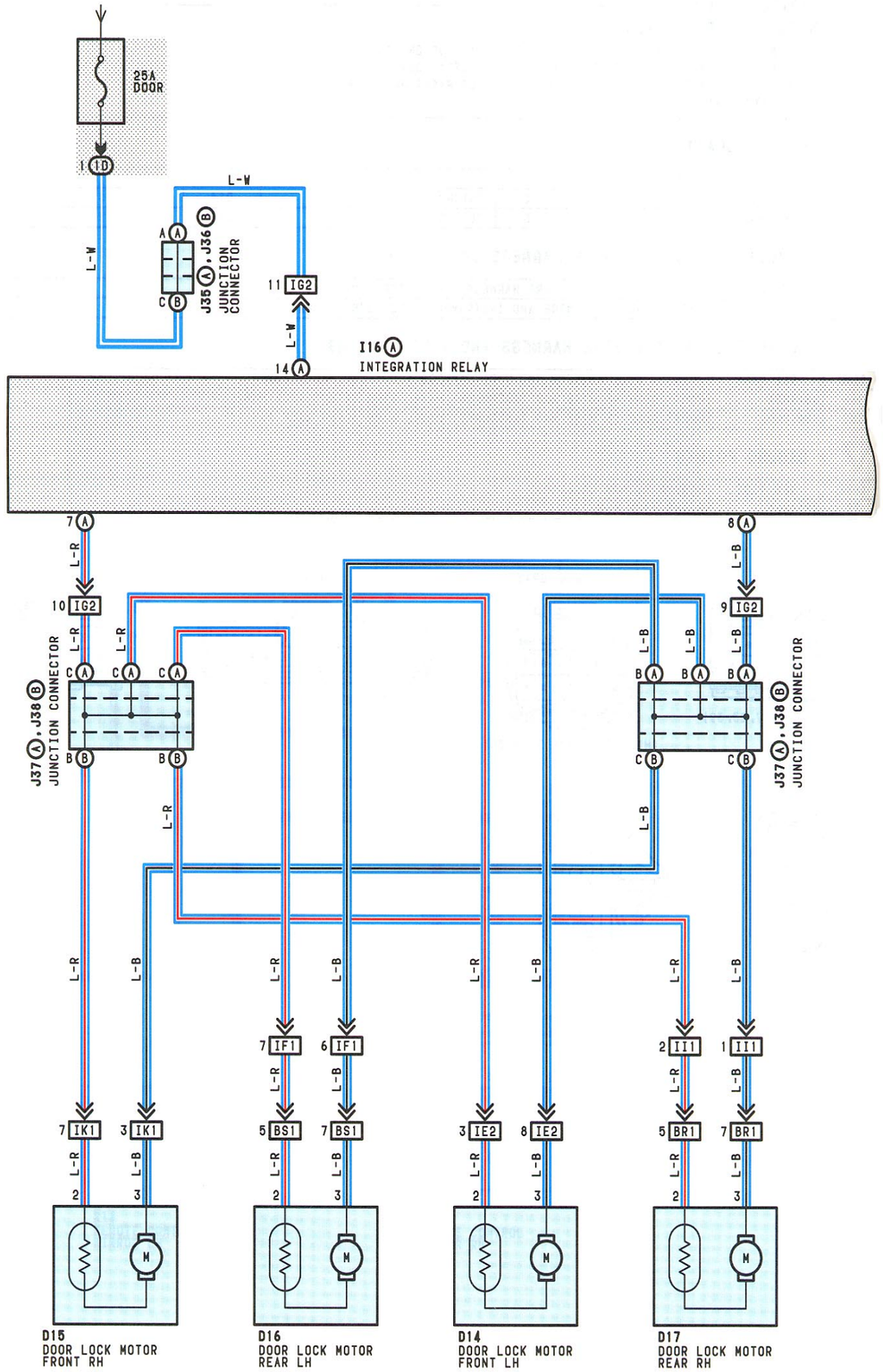

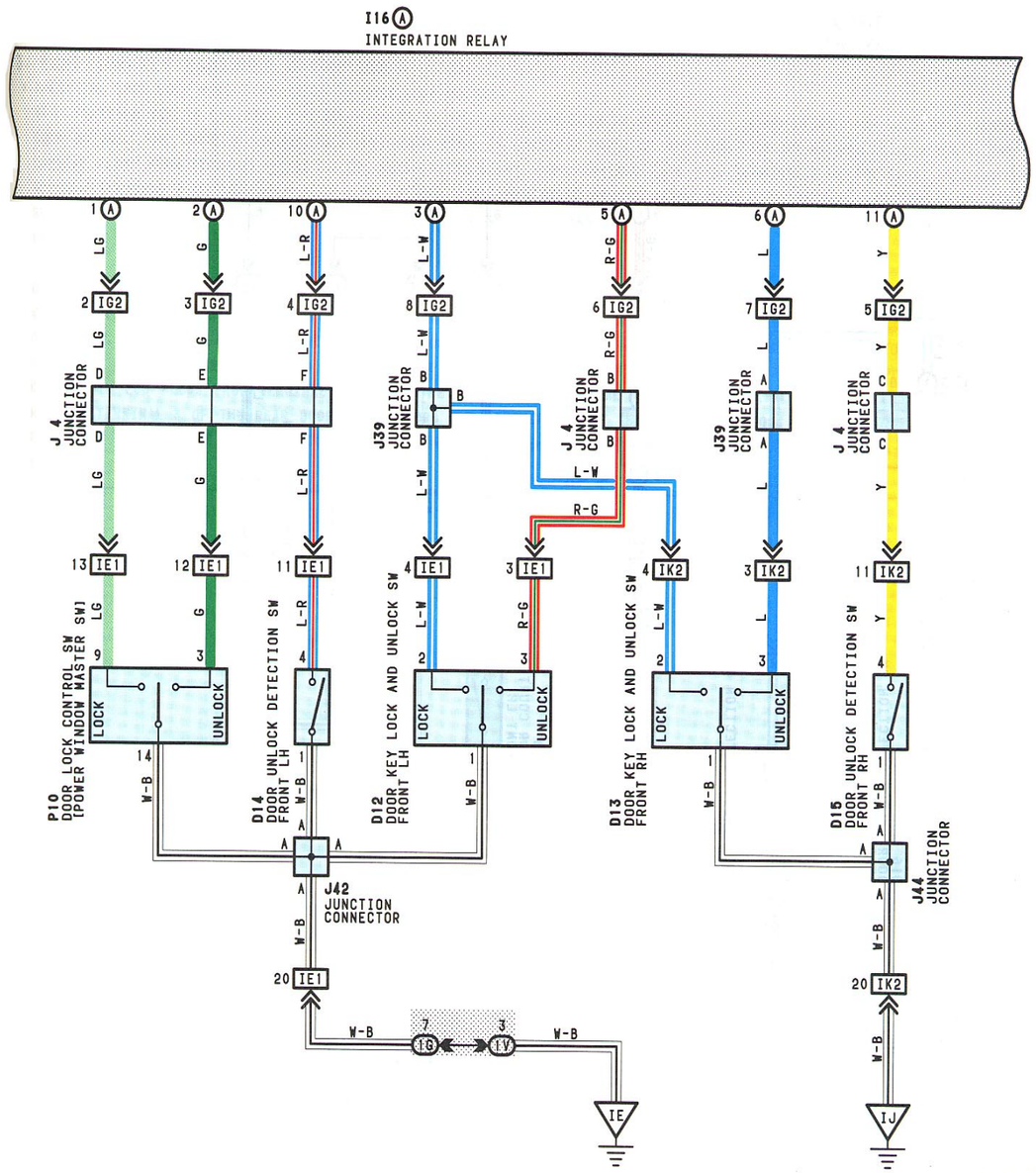

DOOR LOCK CONTROL(LHD)

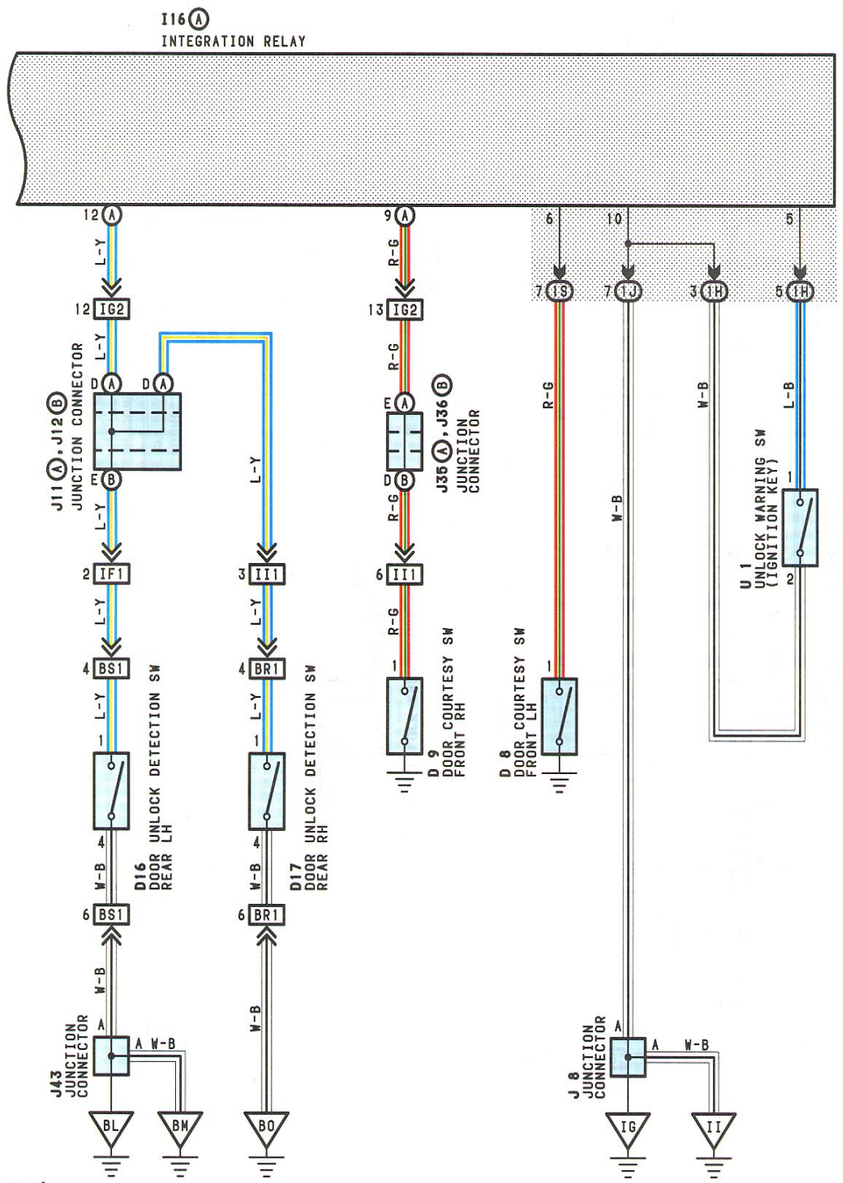

SYSTEM OUTLINE

CURRENT ALWAYS FLOWS TO **TERMINAL** (A)14 OF THE INTEGRATION RELAY THROUGH THE **DOOR** FUSE.

1. MANUAL LOCK OPERATION

WHEN THE DOOR LOCK CONTROL SW OR DOOR KEY LOCK AND UNLOCK SW ARE PUSHED TO **LOCK** POSITION, A LOCK SIGNAL IS INPUT TO **TERMINAL** (A)1 OR (A)3 OF THE INTEGRATION RELAY AND CAUSES THE RELAY TO FUNCTION. CURRENT FLOWS FROM **TERMINAL** (A)14 OF THE RELAY → **TERMINAL** (A)7 → **TERMINAL 2** OF THE FRONT DOOR LOCK MOTORS, **TERMINAL 2** OF THE REAR DOOR LOCK MOTORS → **TERMINAL 3** OF THE FRONT DOOR LOCK MOTORS, **TERMINAL 3** OF THE REAR DOOR LOCK MOTORS → **TERMINAL** (A)8 OF THE RELAY → **TERMINAL 10** → **GROUND** AND THE DOOR LOCK MOTOR CAUSES THE DOOR TO LOCK.

2. MANUAL UNLOCK OPERATION

WHEN THE DOOR LOCK CONTROL SW OR DOOR KEY LOCK AND UNLOCK SW ARE PUSHED TO **UNLOCK** POSITION, AN UNLOCK SIGNAL IS INPUT TO **TERMINAL** (A)2, (A)5 OR (A)6 OF THE INTEGRATION RELAY AND CAUSES THE RELAY TO FUNCTION. CURRENT FLOWS FROM **TERMINAL** (A)14 OF THE RELAY → **TERMINAL** (A)8 → **TERMINAL 3** OF THE FRONT DOOR LOCK MOTORS, **TERMINAL 3** OF THE REAR DOOR LOCK MOTORS → **TERMINAL 2** OF THE FRONT DOOR LOCK MOTORS, **TERMINAL 2** OF THE REAR DOOR LOCK MOTORS → **TERMINAL** (A)7 OF THE RELAY → **TERMINAL 10** → **GROUND** AND DOOR LOCK MOTORS CAUSES DOOR TO UNLOCK.

3. IGNITION KEY REMINDER OPERATION

- OPERATING DOOR LOCK KNOB (OPERATION OF DOOR LOCK MOTORS)
  WITH IGNITION KEY IN CYLINDER (UNLOCK WARNING SW ON), WHEN THE DOOR IS OPENED AND LOCKED USING DOOR LOCK KNOB (DOOR LOCK MOTOR), THE DOOR IS LOCKED ONCE BUT EACH DOOR IS UNLOCKED SOON BY THE FUNCTION OF RELAY. AS A RESULT, THE CURRENT FLOWS FROM **TERMINAL** (A)14 OF THE INTEGRATION RELAY → **TERMINAL** (A)8 → **TERMINAL 3** OF THE FRONT DOOR LOCK MOTORS, **TERMINAL 3** OF THE REAR DOOR LOCK MOTORS → **TERMINAL 2** OF THE FRONT DOOR LOCK MOTORS, **TERMINAL 2** OF THE REAR DOOR LOCK MOTORS → **TERMINAL** (A)7 OF THE RELAY → **TERMINAL 10** → **GROUND** AND CAUSES ALL THE DOORS TO UNLOCK.

- OPERATING DOOR LOCK CONTROL SW OR DOOR KEY LOCK AND UNLOCK SW
  WITH IGNITION KEY IN CYLINDER (UNLOCK WARNING SW ON), WHEN THE DOOR IS OPENED AND LOCKED USING DOOR LOCK CONTROL SW OR KEY SW, THE DOOR IS LOCKED ONCE BUT EACH DOOR IS UNLOCK BY THE FUNCTION OF SW CONTAINED IN MOTORS, WHICH THE SIGNAL IS INPUT TO **TERMINAL** (A)10 (FRONT LH) OR (A)11 (FRONT RH) OF THE RELAY. ACCORDING TO THIS INPUT SIGNAL, THE CURRENT IN ECU FLOWS FROM **TERMINAL** (A)14 OF THE RELAY → **TERMINAL** (A)8 → **TERMINAL 3** OF THE FRONT DOOR LOCK MOTORS, **TERMINAL 3** OF THE REAR DOOR LOCK MOTORS → **TERMINAL 2** OF THE FRONT DOOR LOCK MOTORS, **TERMINAL 2** OF THE REAR DOOR LOCK MOTORS → **TERMINAL** (A)7 OF THE RELAY → **TERMINAL 10** → **GROUND** AND CAUSES ALL THE DOORS TO UNLOCK.

DOOR LOCK CONTROL(LHD)

SERVICE HINTS

I16 Ⓐ INTEGRATION RELAY

10-GROUND:ALWAYS CONTINUITY
6-GROUND:CONTINUITY WITH THE FRONT LH DOOR OPEN
Ⓐ 14-GROUND:ALWAYS APPROX. 12 VOLTS
Ⓐ 8-GROUND:APPROX. 12 VOLTS 0.2 SECONDS WITH FOLLOWING OPERATION
- THE DOOR LOCK CONTROL SW UNLOCKED
- THE DOOR LOCK CONTROL SW LOCKED WITH THE IGNITION KEY IN CYLINDER AND THE FRONT LH DOOR OPEN (IGNITION KEY REMINDER FUNCTION)
- THE DOOR LOCK KNOB LOCKED WITH THE IGNITION KEY IN CYLINDER AND THE FRONT LH DOOR OPEN (IGNITION KEY REMINDER FUNCTION)
- UNLOCKING THE FRONT LH,RH DOOR CYLINDER WITH KEY

Ⓐ 7-GROUND:APPROX. 12 VOLTS 0.2 SECONDS WITH FOLLOWING OPERATION
- THE DOOR LOCK CONTROL SW LOCKED
- LOCKING THE FRONT LH,RH DOOR CYLINDER WITH KEY

Ⓐ 1-GROUND:0 VOLTS WITH THE DOOR LOCK CONTROL SW LOCKED
Ⓐ 9-GROUND:CONTINUITY WITH THE FRONT RH DOOR OPEN
Ⓐ 10-GROUND:CONTINUITY WITH THE FRONT LH DOOR LOCK KNOB UNLOCKED
Ⓐ 11-GROUND:CONTINUITY WITH THE FRONT RH DOOR LOCK KNOB UNLOCKED
Ⓐ 2-GROUND:0 VOLTS WITH THE DOOR LOCK CONTROL SW UNLOCKED
Ⓐ 5-GROUND:0 VOLTS WITH THE FRONT LH DOOR LOCK CYLINDER UNLOCKED WITH KEY
Ⓐ 6-GROUND:0 VOLTS WITH THE FRONT RH DOOR LOCK CYLINDER UNLOCKED WITH KEY
Ⓐ 3-GROUND:0 VOLTS WITH THE FRONT LH,RH DOOR LOCK CYLINDER LOCKED WITH KEY

D 8,D 9 DOOR COURTESY SW FRONT LH, RH

1-GROUND:CLOSED WITH EACH DOOR OPEN

D12 DOOR KEY LOCK AND UNLOCK SW FRONT LH

2-1:CLOSED WITH THE DOOR LOCK CYLINDER LOCKED WITH KEY
3-1:CLOSED WITH THE DOOR LOCK CYLINDER UNLOCKED WITH KEY

D13 DOOR KEY LOCK AND UNLOCK SW FRONT RH

2-1:CLOSED WITH THE DOOR LOCK CYLINDER LOCKED WITH KEY
3-1:CLOSED WITH THE DOOR LOCK CYLINDER UNLOCKED WITH KEY

D14,D15 DOOR LOCK MOTOR AND DOOR UNLOCK DETECTION SW FRONT LH, RH

4-1:CLOSED WITH UNLOCK POSITION

U 1 UNLOCK WARNING SW (IGNITION KEY)

1-2:CLOSED WITH THE IGNITION KEY IN CYLINDER

○ : PARTS LOCATION

CODE	SEE PAGE	CODE	SEE PAGE	CODE	SEE PAGE
D 8	68(LHD)	I16 A	64(LHD)	J38 B	66(LHD)
D 9	68(LHD)	J 4	66(LHD)	J39	66(LHD)
D12	68(LHD)	J 8	66(LHD)	J42	68(LHD)
D13	68(LHD)	J11 A	66(LHD)	J43	68(LHD)
D14	68(LHD)	J12 B	66(LHD)	J44	68(LHD)
D15	68(LHD)	J35 A	66(LHD)	P10	68(LHD)
D16	68(LHD)	J36 B	66(LHD)	U 1	66(LHD)
D17	68(LHD)	J37 A	66(LHD)		

: JUNCTION BLOCK AND WIRE HARNESS CONNECTOR

CODE	SEE PAGE	JUNCTION BLOCK AND WIRE HARNESS (CONNECTOR LOCATION)
1D	52(LHD)	INSTRUMENT PANEL WIRE AND INSTRUMENT PANEL J/B (LOWER FINISH PANEL)
1G		
1H		
1J	52(LHD)	COWL WIRE AND INSTRUMENT PANEL J/B (LOWER FINISH PANEL)
1S	52(LHD)	FLOOR WIRE AND INSTRUMENT PANEL J/B (LOWER FINISH PANEL)
1V	52(LHD)	COWL WIRE AND INSTRUMENT PANEL J/B (LOWER FINISH PANEL)

□ : CONNECTOR JOINING WIRE HARNESS AND WIRE HARNESS

CODE	SEE PAGE	JOINING WIRE HARNESS AND WIRE HARNESS (CONNECTOR LOCATION)
IE1	86(LHD)	FRONT DOOR LH WIRE AND INSTRUMENT PANEL WIRE (LEFT KICK PANEL)
IE2		
IF1	86(LHD)	FLOOR WIRE AND INSTRUMENT PANEL WIRE (LEFT KICK PANEL)
IG2	86(LHD)	INSTRUMENT PANEL WIRE AND COWL WIRE (LOWER FINISH PANEL)
II1	88(LHD)	FLOOR NO.2 WIRE AND INSTRUMENT PANEL WIRE (RIGHT KICK PANEL)
IK1	88(LHD)	FRONT DOOR RH WIRE AND INSTRUMENT PANEL WIRE (RIGHT KICK PANEL)
IK2		
BR1	90(LHD)	REAR DOOR NO.1 WIRE AND FLOOR NO.2 WIRE (UNDER THE RIGHT CENTER PILLAR)
BS1	90(LHD)	REAR DOOR NO.2 WIRE AND FLOOR WIRE (UNDER THE LEFT CENTER PILLAR)

▽ : GROUND POINTS

CODE	SEE PAGE	GROUND POINTS LOCATION
IE	86(LHD)	COWL SIDE PANEL LH
IG	86(LHD)	INSTRUMENT PANEL BRACE LH
II	86(LHD)	COWL SIDE PANEL RH
IJ	86(LHD)	RIGHT KICK PANEL
BL	90(LHD)	UNDER THE LEFT CENTER PILLAR
BN	90(LHD)	BACK PANEL CENTER
BO	90(LHD)	UNDER THE RIGHT CENTER PILLAR

D 8

D 9

D12
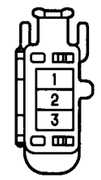

D13
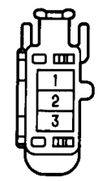

D14 BLACK

D15 BLACK
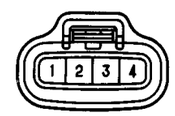

D16 BLACK

D17 BLACK

I16 Ⓐ ORANGE
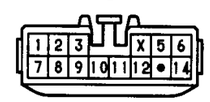

J 4
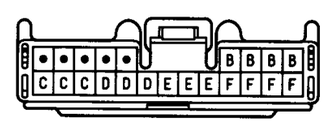
(HINT:SEE PAGE 7,23,39)

J 8
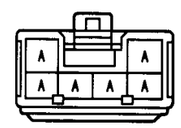
(HINT:SEE PAGE 7,23,39)

J11 Ⓐ BLACK
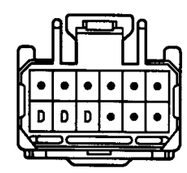
(HINT:SEE PAGE 7,23,39)

J12 Ⓑ BLACK
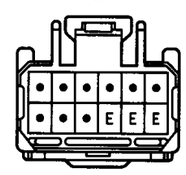
(HINT:SEE PAGE 7,23,39)

J35 Ⓐ BLACK
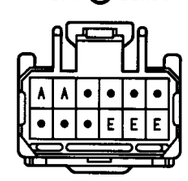
(HINT:SEE PAGE 7,23,39)

J36 Ⓑ BLACK
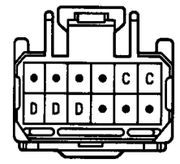
(HINT:SEE PAGE 7,23,39)

J37 Ⓐ GRAY
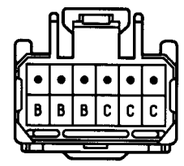
(HINT:SEE PAGE 7,23,39)

J38 Ⓑ GRAY
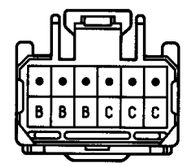
(HINT:SEE PAGE 7,23,39)

J39
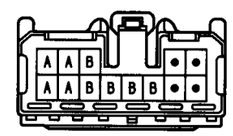
(HINT:SEE PAGE 7,23,39)

J42
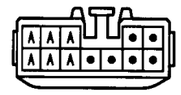
(HINT:SEE PAGE 7,23,39)

J43
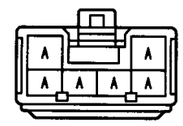
(HINT:SEE PAGE 7,23,39)

J44

(HINT:SEE PAGE 7,23,39)

P10
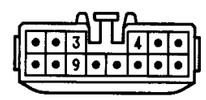

U 1
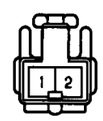

UNLOCK WARNING(LHD)

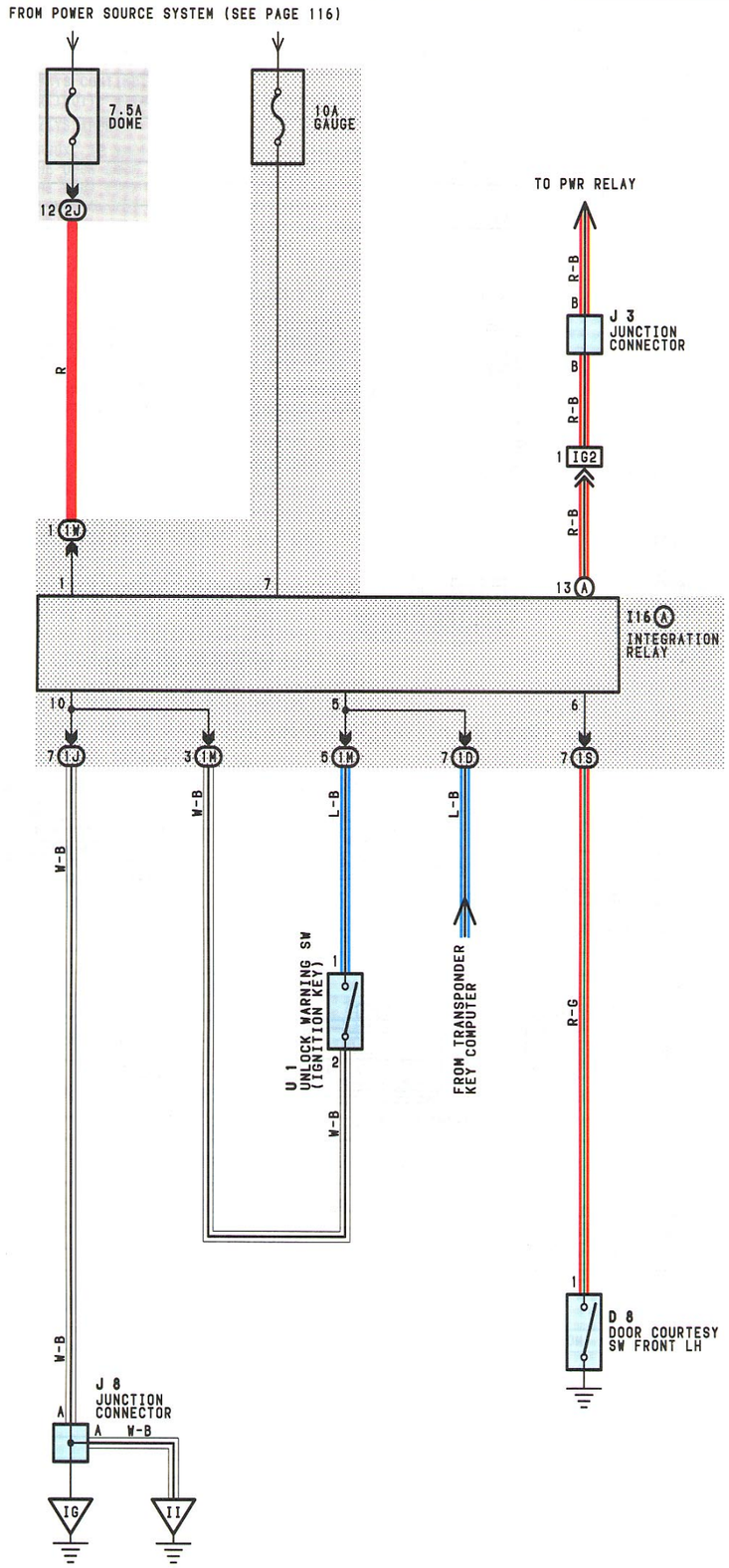

SYSTEM OUTLINE

CURRENT ALWAYS FLOWS TO **TERMINAL 1** OF THE INTEGRATION RELAY THROUGH THE **DOME** FUSE.

1.KEY REMINDER SYSTEM

WITH THE IGNITION KEY INSERTED IN THE KEY CYLINDER (UNLOCK WARNING SW ON), THE IGNITION SW STILL OFF AND DRIVER'S DOOR OPEN (DOOR COURTESY SW ON), WHEN A SIGNAL IS INPUT **TERMINALS 5** AND **6** OF THE INTEGRATION RELAY, THE INTEGRATION RELAY OPERATES, CURRENT FLOWS FROM **TERMINAL 1** OF THE INTEGRATION RELAY → **TERMINAL 10** → **GROUND** AND THE KEY REMINDER BUZZER SOUNDS.

SERVICE HINTS

D 8 DOOR COURTESY SW FRONT LH

1-GROUND:CLOSED WITH THE DRIVER'S DOOR OPEN

INTEGRATION RELAY

10-GROUND:ALWAYS CONTINUITY
6-GROUND:CONTINUITY WITH THE DRIVER'S DOOR OPEN
1-GROUND:ALWAYS APPROX. 12 VOLTS
7-GROUND:APPROX. 12 VOLTS WITH THE IGNITION SW ON

U 1 UNLOCK WARNING SW (IGNITION KEY)

1-2:CLOSED WITH THE IGNITION KEY IN CYLINDER

○ : PARTS LOCATION

CODE	SEE PAGE	CODE	SEE PAGE	CODE	SEE PAGE
D 8	68(LHD)	J 3	66(LHD)	U 1	66(LHD)
I16 A	64(LHD)	J 8	66(LHD)		

⬭ : JUNCTION BLOCK AND WIRE HARNESS CONNECTOR

CODE	SEE PAGE	JUNCTION BLOCK AND WIRE HARNESS (CONNECTOR LOCATION)
1D	52(LHD)	INSTRUMENT PANEL WIRE AND INSTRUMENT PANEL J/B (LOWER FINISH PANEL)
1J	52(LHD)	COWL WIRE AND INSTRUMENT PANEL J/B (LOWER FINISH PANEL)
1M		
1S	52(LHD)	FLOOR WIRE AND INSTRUMENT PANEL J/B (LOWER FINISH PANEL)
1W	52(LHD)	COWL WIRE AND INSTRUMENT PANEL J/B (LOWER FINISH PANEL)
2J	56	COWL WIRE AND ENGINE ROOM J/B NO.2 (ENGINE COMPARTMENT LEFT)

□ : CONNECTOR JOINING WIRE HARNESS AND WIRE HARNESS

CODE	SEE PAGE	JOINING WIRE HARNESS AND WIRE HARNESS (CONNECTOR LOCATION)
IG2	86(LHD)	INSTRUMENT PANEL WIRE AND COWL WIRE (LOWER FINISH PANEL)

▽ : GROUND POINTS

CODE	SEE PAGE	GROUND POINTS LOCATION
IG	86(LHD)	INSTRUMENT PANEL BRACE LH
II	86(LHD)	COWL SIDE PANEL RH

D 8

I16 A ORANGE

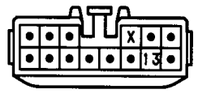

J 3 BLACK

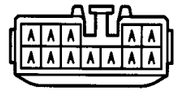

(HINT:SEE PAGE 7,23,39)

J 8

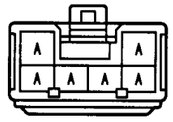

(HINT:SEE PAGE 7,23,39)

U 1

MOON ROOF (LHD)

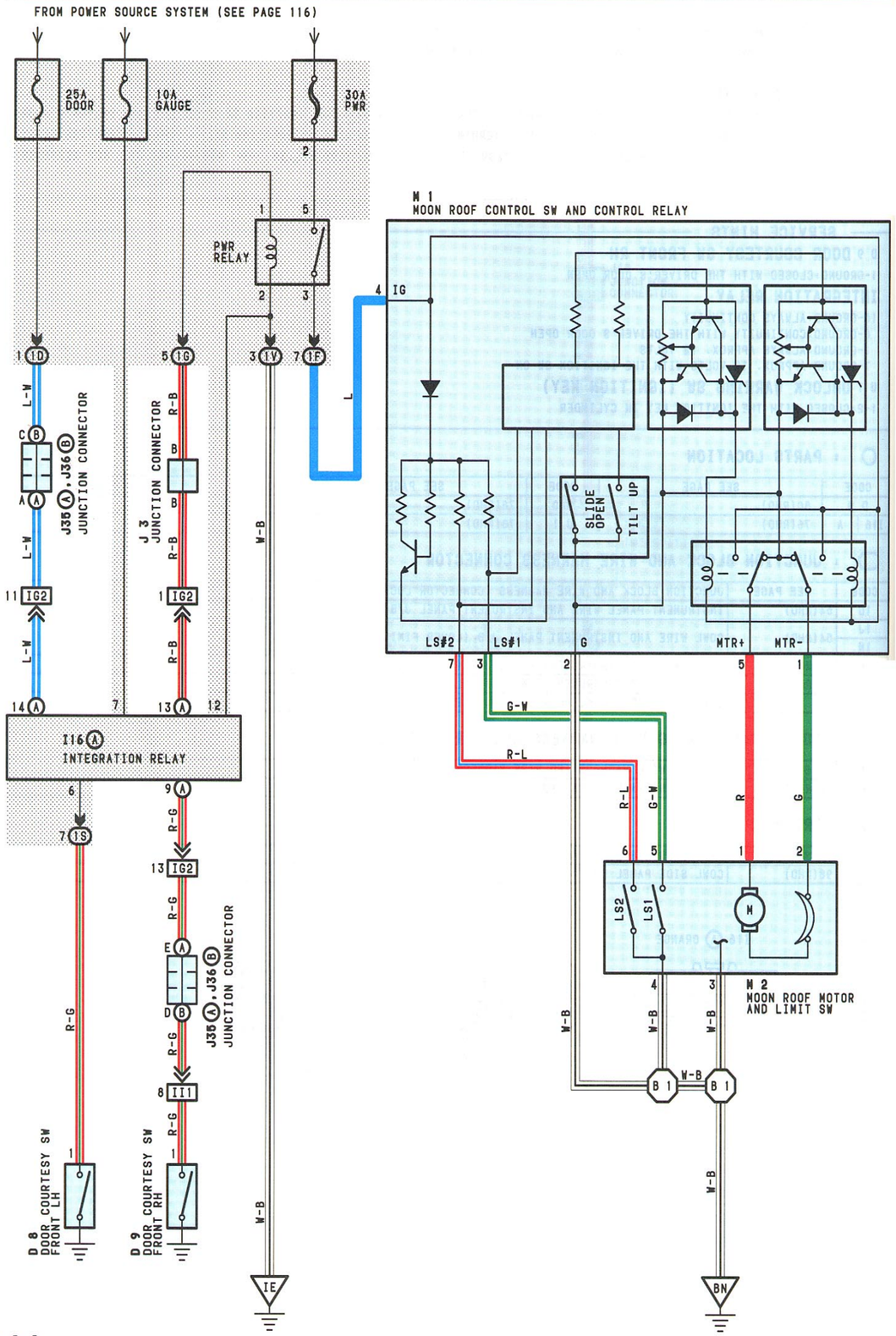

SYSTEM OUTLINE

CURRENT IS APPLIED AT ALL TIMES THROUGH THE **PWR** FUSE TO **TERMINAL 5** OF THE PWR RELAY. WITH THE IGNITION SW TURNED ON, THE CURRENT FLOWS THROUGH THE **GAUGE** FUSE → **TERMINAL 7** OF THE INTEGRATION RELAY → **TERMINAL** Ⓐ**13** → **TERMINAL 1** OF THE PWR RELAY → **TERMINAL 2** → **GROUND**.
AS A RESULT, PWR RELAY IS ACTIVATED AND THE CURRENT TO **TERMINAL 5** OF THE PWR RELAY FLOWS FROM **TERMINAL 3** OF THE PWR RELAY TO **TERMINAL 4** OF THE MOON ROOF CONTROL SW AND CONTROL RELAY.

1. SLIDE OPEN OPERATION

WHEN TURNING THE SLIDE OPEN SW "ON" WITH THE ROOF CLOSED, THE MOON ROOF CONTROL SW AND CONTROL RELAY WILL MAKE THE MOTOR ROTATE TO THE "OPEN" DIRECTION UNTIL THEY BECOME ANY OF THE FOLLOWING CONDITIONS SUCH AS THE **TERMINAL IG** BECOMES "OFF" OR ANY OF THE SWS IS TURNED "ON" OR THE TIME LIMIT (ABOUT **20** SECONDS) IS UP OR THE CURRENT GOSE UP THE UPPER LIMIT (ABOUT **15** AMPERE).

2. SLIDE CLOSE OPERATION

WHEN TURNING THE SLIDE CLOSE SW (TILT UP) "ON" WITH THE ROOF OPEN, THE MOON ROOF CONTROL SW AND CONTROL RELAY WILL MAKE THE MOTOR ROTATE TO THE "CLOSE" DIRECTION UNTIL THEY BECOME **HALF** POSITION (LS1 SW TURNS FROM "ON" TO "OFF"). UNDER THE CONDITION WITH THE ROOF HALF CLOSED, WHEN TURNING THE SLIDE CLOSE SW (TILT UP) "ON" AGAIN, THEY WILL MAKE THE MOTOR ROTATE UNTIL THE ROOF IS COMPLETELY CLOSED.

3. TILT UP OPERATION

WITH THE ROOF CLOSED, WHEN THE TILT UP SWITCH IS PUSHED ON, THE MOON ROOF CONTROL SW AND CONTROL RELAY DRIVES THE MOTOR IN DIRECTION OF UP (LS1 SW OFF, LS2 SW OFF).

4. TILT DOWN OPERATION

WHEN THE ROOF UP, WHEN THE TILT DOWN SWITCH (SLIDE OPEN) IS PUSHED ON, THE MOON ROOF CONTROL SW AND CONTROL RELAY DRIVES THE MOTOR IN DIRECTION OF DOWN, AND THE MOTOR STOPS AT **FULLY DOWN** POSITION (LS1 SW OFF TO ON).

5. KEY OFF MOON ROOF OPERATION

WITH THE IGNITION SW TURNED FROM ON TO OFF, INTEGRATION RELAY OPERATES AND CURRENT FLOWS FROM THE **DOOR** FUSE TO **TERMINAL** Ⓐ**14** OF THE RELAY → **TERMINAL** Ⓐ**13** → **TERMINAL 1** OF THE PWR RELAY → **TERMINAL 2** → **GROUND** FOR ABOUT **40** SECONDS. THE SAME AS NORMAL OPERATION, THE CURRENT FLOWS FROM THE **PWR** FUSE TO **TERMINAL 5** OF THE PWR RELAY → **TERMINAL 3** → **TERMINAL 4** OF THE MOON ROOF CONTROL SW AND CONTROL RELAY. AS A RESULT, FOR ABOUT **40** SECONDS AFTER THE IGNITION SW IS TURNED OFF, THE FUNCTIONING OF THIS RELAY MAKES IT POSSIBLE TO OPEN AND CLOSE THE MOON ROOF. ALSO, BY OPENING THE FRONT DOOR (DOOR OPEN DETECTION SW ON) WITHIN ABOUT **40** SECONDS AFTER TURNING THE IGNITION SW TO OFF, A SIGNAL IS INPUT TO **TERMINALS 6** OR Ⓐ**9** OF THE INTEGRATION RELAY. AS A RESULT, THE RELAY TURNS OFF AND OPEN CLOSE MOVEMENT OF THE MOON ROOF STOPS.

SERVICE HINTS

PWR RELAY

5-3:CLOSED WITH THE IGNITION SW AT **ON** POSITION

M 1 MOON ROOF CONTROL SW AND CONTROL RELAY

2-GROUND:ALWAYS CONTINUITY
4-GROUND:APPROX. **12** VOLTS WITH THE IGNITION SW AT **ON** POSITION

MOON ROOF(LHD)

○ : PARTS LOCATION

CODE		SEE PAGE	CODE		SEE PAGE	CODE	SEE PAGE
D 8		68(LHD)	J 3		66(LHD)	M 1	68(LHD)
D 9		68(LHD)	J35	A	66(LHD)	M 2	68(LHD)
I16	A	64(LHD)	J36	B	66(LHD)		

: JUNCTION BLOCK AND WIRE HARNESS CONNECTOR

CODE	SEE PAGE	JUNCTION BLOCK AND WIRE HARNESS (CONNECTOR LOCATION)
1D	52(LHD)	INSTRUMENT PANEL WIRE AND INSTRUMENT PANEL J/B (LOWER FINISH PANEL)
1F	52(LHD)	ROOF WIRE AND INSTRUMENT PANEL J/B (LOWER FINISH PANEL)
1G	52(LHD)	INSTRUMENT PANEL WIRE AND INSTRUMENT PANEL J/B (LOWER FINISH PANEL)
1S	52(LHD)	FLOOR WIRE AND INSTRUMENT PANEL J/B (LOWER FINISH PANEL)
1V	52(LHD)	COWL WIRE AND INSTRUMENT PANEL J/B (LOWER FINISH PANEL)

▭ : CONNECTOR JOINING WIRE HARNESS AND WIRE HARNESS

CODE	SEE PAGE	JOINING WIRE HARNESS AND WIRE HARNESS (CONNECTOR LOCATION)
IG2	86(LHD)	INSTRUMENT PANEL WIRE AND COWL WIRE (LOWER FINISH PANEL)
II1	88(LHD)	FLOOR NO.2 WIRE AND INSTRUMENT PANEL WIRE (RIGHT KICK PANEL)

▽ : GROUND POINTS

CODE	SEE PAGE	GROUND POINTS LOCATION
IE	86(LHD)	COWL SIDE PANEL LH
BN	90(LHD)	ROOF LEFT

⬡ : SPLICE POINTS

CODE	SEE PAGE	WIRE HARNESS WITH SPLICE POINTS	CODE	SEE PAGE	WIRE HARNESS WITH SPLICE POINTS
B 1	90(LHD)	ROOF WIRE			

D 8

D 9

J 3 BLACK

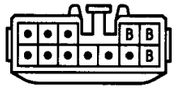

(HINT:SEE PAGE 7,23,39)

J35 (A) BLACK

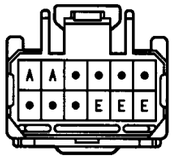

(HINT:SEE PAGE 7,23,39)

J36 (B) BLACK

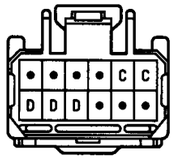

(HINT:SEE PAGE 7,23,39)

M 1

M 2

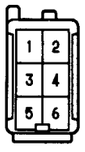

POWER WINDOW(LHD)

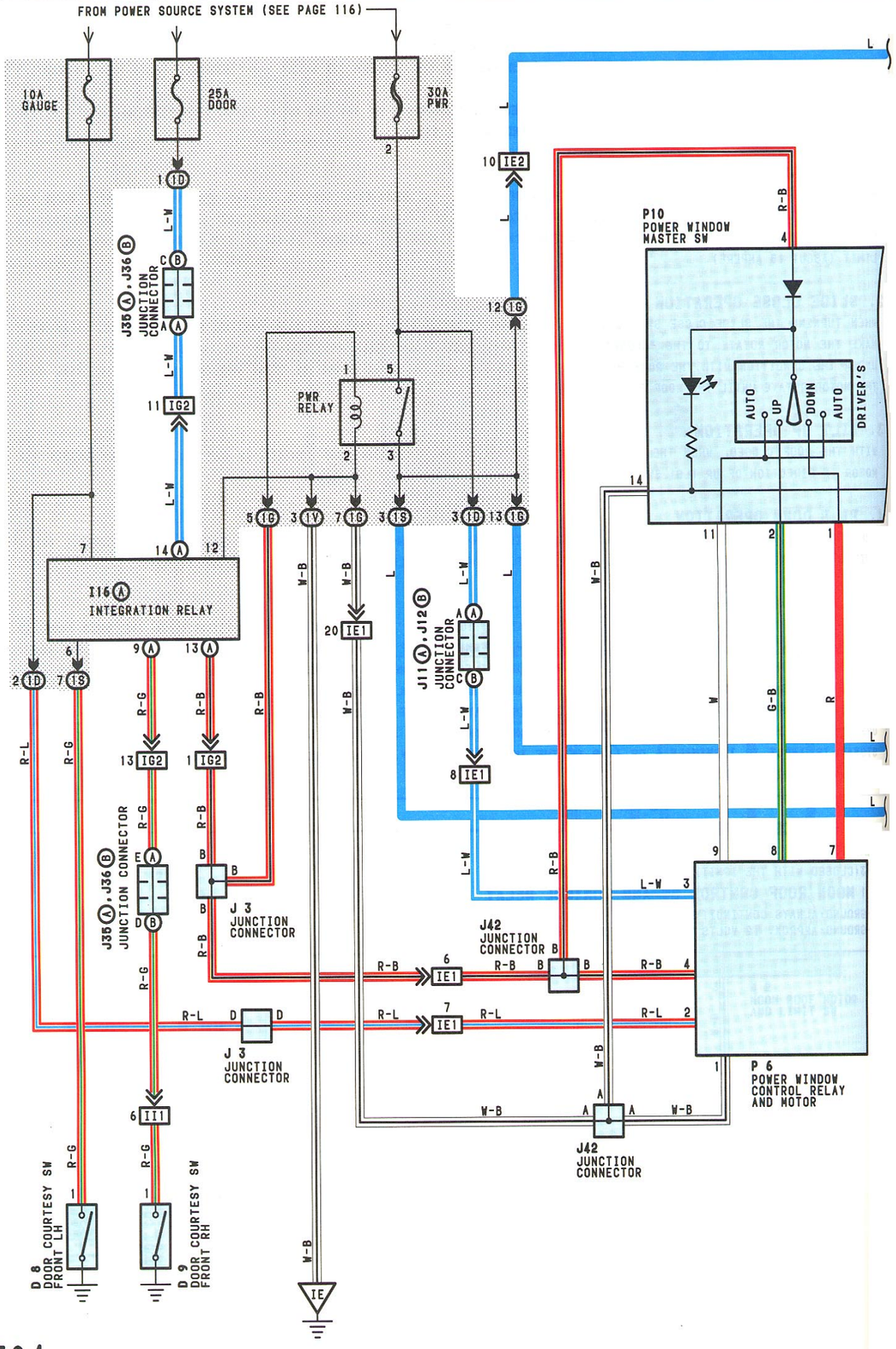

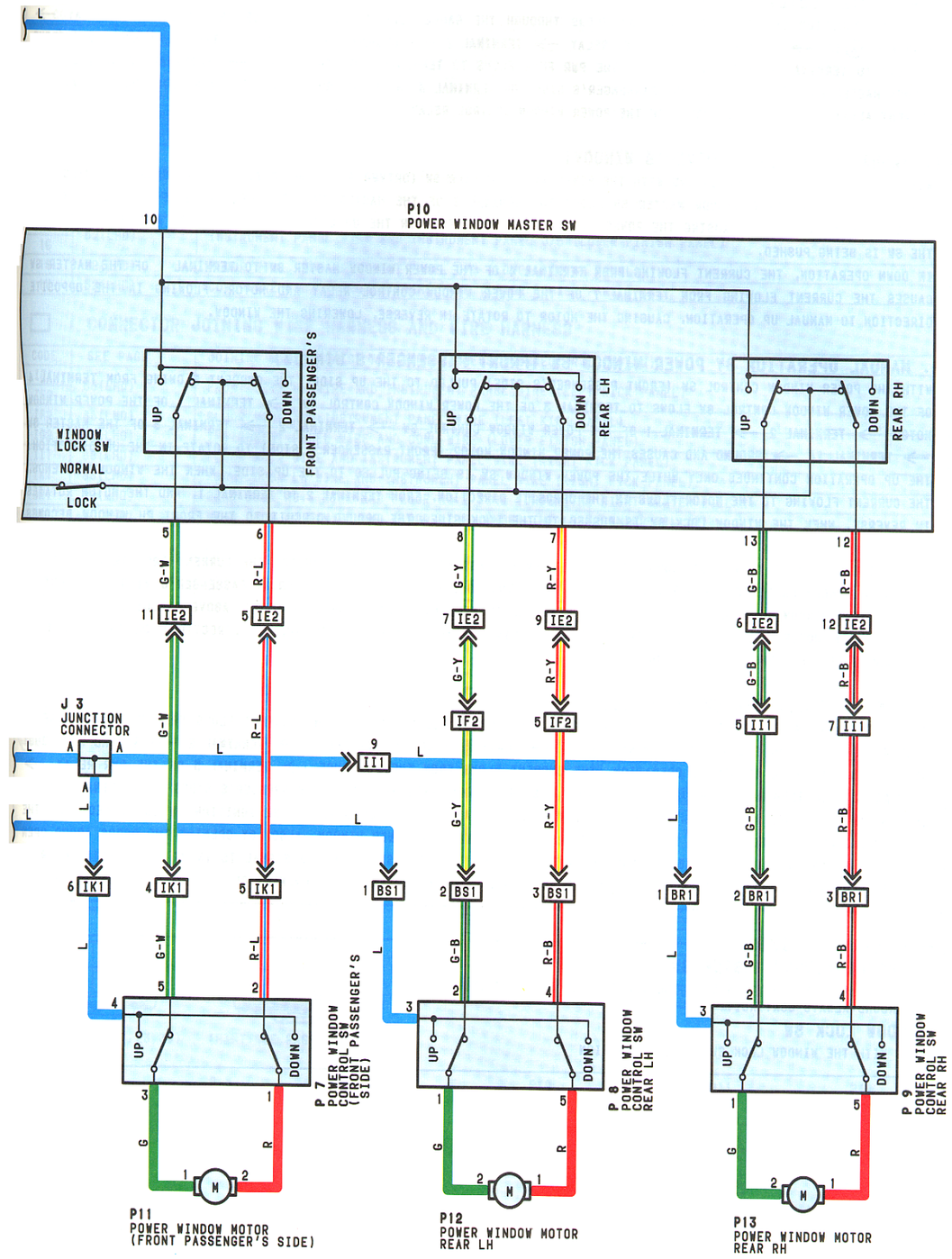

POWER WINDOW(LHD)

SYSTEM OUTLINE

WITH THE IGNITION SW TURNED ON, CURRENT FLOWS THROUGH THE **GAUGE** FUSE TO **TERMINAL 7** OF THE INTEGRATION RELAY → **TERMINAL Ⓐ13** → **TERMINAL 1** OF THE PWR RELAY → **TERMINAL 2** → **GROUND**. THIS ACTIVATES THE RELAY AND THE CURRENT FLOWING TO **TERMINAL 5** OF THE RELAY FROM THE **PWR** FUSE FLOWS TO **TERMINAL 3** OF THE RELAY → **TERMINAL 10** OF THE POWER WINDOW MASTER SW, **TERMINAL 4** (FRONT PASSENGER'S SIDE) OR **TERMINAL 3** (REAR LH, RH) OF THE POWER WINDOW CONTROL SW.
CURRENT ALWAYS FLOWS TO **TERMINAL 3** OF THE POWER WINDOW CONTROL RELAY AND MOTOR.

1. MANUAL OPERATION (DRIVER'S WINDOW)

WITH THE IGNITION SW TURNED ON AND WITH THE POWER WINDOW MASTER SW (DRIVER'S) IN **UP** POSITION, THE CURRENT FLOWING FROM **TERMINAL 4** OF THE POWER WINDOW MASTER SW FLOWS TO **TERMINAL 2** OF THE MASTER SW → **TERMINAL 8** OF THE POWER WINDOW CONTROL RELAY AND MOTOR, CAUSING THE POWER WINDOW MOTOR TO ROTATE IN THE UP DIRECTION. THE WINDOW ASCENDS ONLY WHILE THE SW IS BEING PUSHED.
IN DOWN OPERATION, THE CURRENT FLOWING FROM **TERMINAL 4** OF THE POWER WINDOW MASTER SW TO **TERMINAL 1** OF THE MASTER SW CAUSES THE CURRENT FLOWING FROM **TERMINAL 7** OF THE POWER WINDOW CONTROL RELAY AND MOTOR, FLOWING IN THE OPPOSITE DIRECTION TO MANUAL UP OPERATION, CAUSING THE MOTOR TO ROTATE IN REVERSE, LOWERING THE WINDOW.

2. MANUAL OPERATION BY POWER WINDOW SW (FRONT PASSENGER'S WINDOW)

WITH THE POWER WINDOW CONTROL SW (FRONT PASSENGER'S SIDE) PULLED TO THE UP SIDE, THE CURRENT FLOWING FROM **TERMINAL 4** OF THE POWER WINDOW CONTROL SW FLOWS TO **TERMINAL 3** OF THE POWER WINDOW CONTROL SW → **TERMINAL 1** OF THE POWER WINDOW MOTOR → **TERMINAL 2** → **TERMINAL 1** OF THE POWER WINDOW CONTROL SW → **TERMINAL 2** → **TERMINAL 6** OF THE MASTER SW → **TERMINAL 14** → **GROUND** AND CAUSES THE POWER WINDOW MOTOR (FRONT PASSENGER'S SIDE) TO ROTATE IN THE UP DIRECTION. THE UP OPERATION CONTINUES ONLY WHILE THE POWER WINDOW SW IS BEING PULLED TO THE UP SIDE. WHEN THE WINDOW DESCENDS, THE CURRENT FLOWING TO THE MOTOR FLOWS IN THE OPPOSITE DIRECTION, FROM **TERMINAL 2** TO **TERMINAL 1**, AND THE MOTOR ROTATES IN REVERSE. WHEN THE WINDOW LOCK SW IS PUSHED TO THE LOCK SIDE, THE GROUND CIRCUIT TO THE FRONT RH WINDOW BECOMES OPEN.
AS A RESULT, EVEN IF OPEN/CLOSE OPERATION OF THE FRONT PASSENGER'S WINDOW IS TRIED, THE CURRENT FROM **TERMINAL 14** OF THE POWER WINDOW MASTER SW IS NOT GROUNDED AND THE MOTOR DOES NOT ROTATE, SO THE FRONT PASSENGER'S WINDOW CAN NOT BE OPERATED AND WINDOW LOCK OCCURS. FURTHERMORE, REAR LH, RH WINDOWS OPERATE THE SAME AS THE ABOVE CIRCUIT. BUT ONLY THE POWER WINDOW MOTOR REAR RH, THE CURRENT FLOWS **TERMINAL 2** TO **TERMINAL 1** (IN THE UP DIRECTION) OR **TERMINAL 1** TO **TERMINAL 2** (IN THE OPPOSITE DIRECTION).

3. KEY OFF POWER WINDOW OPERATION

WITH THE IGNITION SW TURNED FROM ON TO OFF, THE INTEGRATION RELAY OPERATES AND CURRENT FLOWS FROM THE **DOOR** FUSE TO **TERMINAL Ⓐ14** OF THE RELAY → **TERMINAL Ⓐ13** → **TERMINAL 1** OF THE PWR RELAY → **TERMINAL 2** → **GROUND** FOR ABOUT **45** SECONDS. THE SAME AS NORMAL OPERATION, THE CURRENT FLOWS FROM THE **PWR** FUSE → **TERMINAL 5** OF THE PWR RELAY → **TERMINAL 3** → **TERMINAL 10** OF THE POWER WINDOW MASTER SW AND **TERMINAL 4** (FRONT PASSENGER'S SIDE) OR **TERMINAL 3** (REAR LH, RH) OF THE POWER WINDOW CONTROL SW. AS A RESULT, FOR ABOUT **45** SECONDS AFTER THE IGNITION SW IS TURNED OFF, THE FUNCTIONING OF THIS RELAY MAKES IT POSSIBLE TO RAISE AND LOWER THE POWER WINDOW. ALSO, BY OPENING THE DOORS (DOOR OPEN DETECTION SW ON) WITHIN ABOUT **45** SECONDS AFTER TURNING THE IGNITION SW TO OFF, A SIGNAL IS INPUT TO **TERMINAL 6** OR **Ⓐ 9** OF THE INTEGRATION RELAY. AS A RESULT, THE RELAY TURNED OFF, AND UP AND DOWN MOVEMENT OF THE POWER WINDOW STOPS.

SERVICE HINTS

P10 POWER WINDOW MASTER SW

10-GROUND:APPROX. 12 VOLTS WITH THE IGNITION SW AT **ON** POSITION
14-GROUND:ALWAYS CONTINUITY

WINDOW LOCK SW

OPEN WITH THE WINDOW LOCK SW AT **LOCK** POSITION

○ : PARTS LOCATION

CODE	SEE PAGE	CODE	SEE PAGE	CODE	SEE PAGE
D 8	68(LHD)	J35 A	66(LHD)	P 9	68(LHD)
D 9	68(LHD)	J36 B	66(LHD)	P10	68(LHD)
I16 A	64(LHD)	J42	68(LHD)	P11	68(LHD)
J 3	66(LHD)	P 6	68(LHD)	P12	68(LHD)
J11 A	66(LHD)	P 7	68(LHD)	P13	68(LHD)
J12 B	66(LHD)	P 8	68(LHD)		

: JUNCTION BLOCK AND WIRE HARNESS CONNECTOR

CODE	SEE PAGE	JUNCTION BLOCK AND WIRE HARNESS (CONNECTOR LOCATION)
1D	52(LHD)	INSTRUMENT PANEL WIRE AND INSTRUMENT PANEL J/B (LOWER FINISH PANEL)
1G		
1S	52(LHD)	FLOOR WIRE AND INSTRUMENT PANEL J/B (LOWER FINISH PANEL)
1V	52(LHD)	COWL WIRE AND INSTRUMENT PANEL J/B (LOWER FINISH PANEL)

□ : CONNECTOR JOINING WIRE HARNESS AND WIRE HARNESS

CODE	SEE PAGE	JOINING WIRE HARNESS AND WIRE HARNESS (CONNECTOR LOCATION)
IE1	86(LHD)	FRONT DOOR LH WIRE AND INSTRUMENT PANEL WIRE (LEFT KICK PANEL)
IE2		
IF2	86(LHD)	FLOOR WIRE AND INSTRUMENT PANEL WIRE (LEFT KICK PANEL)
IG2	86(LHD)	INSTRUMENT PANEL WIRE AND COWL WIRE (LOWER FINISH PANEL)
II1	88(LHD)	FLOOR NO.2 WIRE AND INSTRUMENT PANEL WIRE (RIGHT KICK PANEL)
IK1	88(LHD)	FRONT DOOR LH WIRE AND INSTRUMENT PANEL WIRE (RIGHT KICK PANEL)
BR1	90(LHD)	REAR DOOR NO.1 WIRE AND FLOOR NO.2 WIRE (UNDER THE RIGHT CENTER PILLAR)
BS1	90(LHD)	REAR DOOR NO.2 WIRE AND FLOOR WIRE (UNDER THE LEFT CENTER PILLAR)

▽ : GROUND POINTS

CODE	SEE PAGE	GROUND POINTS LOCATION
IE	86(LHD)	COWL SIDE PANEL LH

D 8

D 9

I16 Ⓐ ORANGE

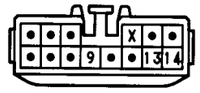

J 3 BLACK

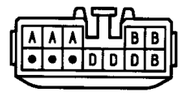

(HINT:SEE PAGE 7,23,39)

J11 Ⓐ BLACK

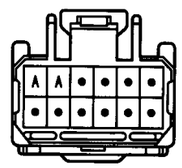

(HINT:SEE PAGE 7,23,39)

J12 Ⓑ BLACK

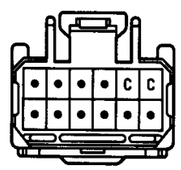

(HINT:SEE PAGE 7,23,39)

J35 Ⓐ BLACK

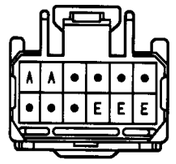

(HINT:SEE PAGE 7,23,39)

J36 Ⓑ BLACK

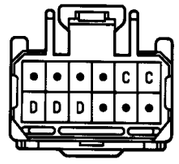

(HINT:SEE PAGE 7,23,39)

J42

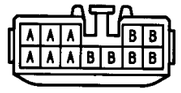

(HINT:SEE PAGE 7,23,39)

P 6

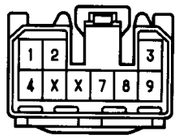

P 7 BLACK

P 8

P 9

P10

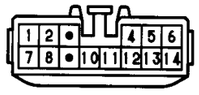

P11

P12

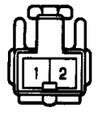

P13

POWER SEAT(LHD)

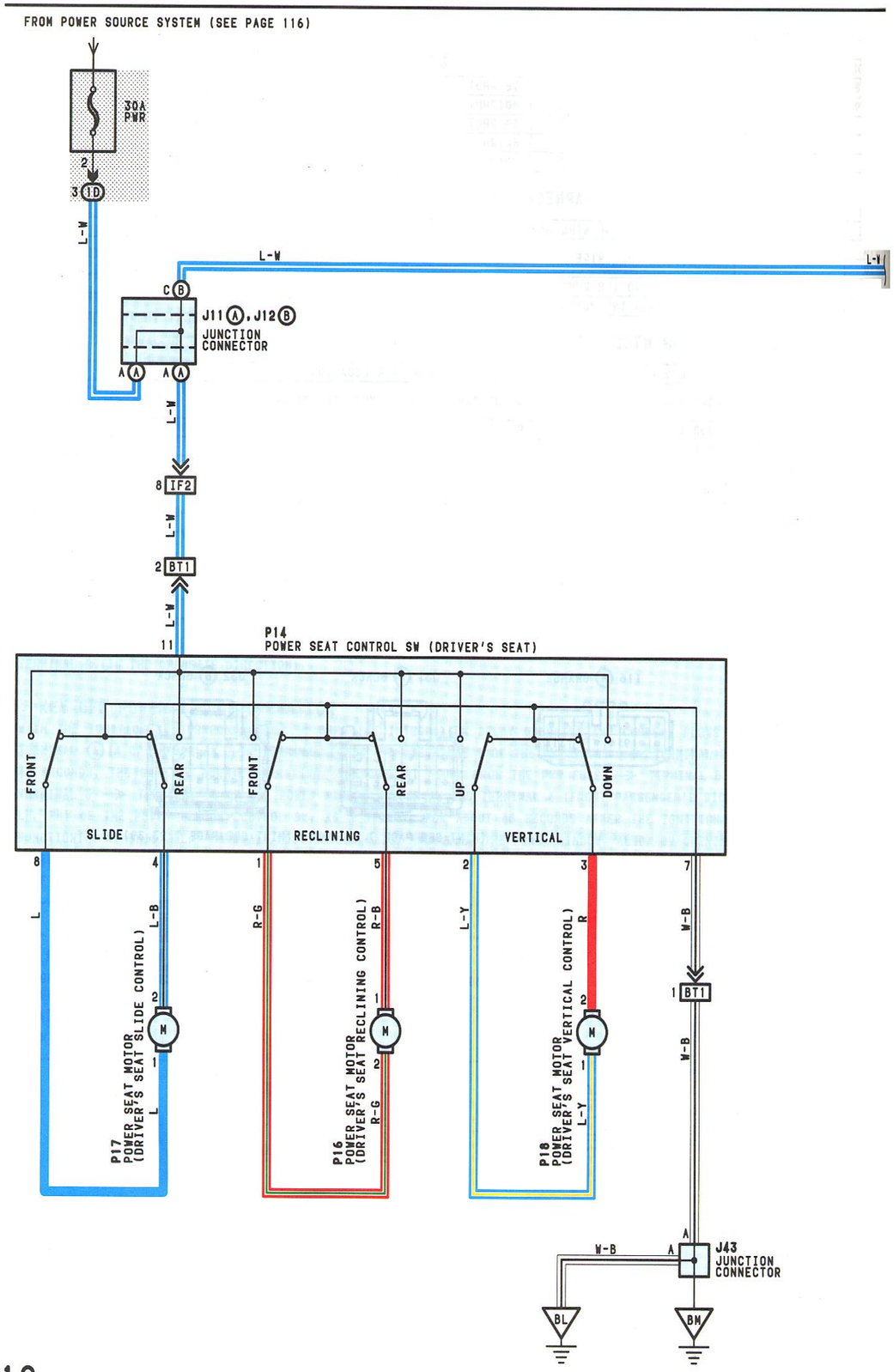

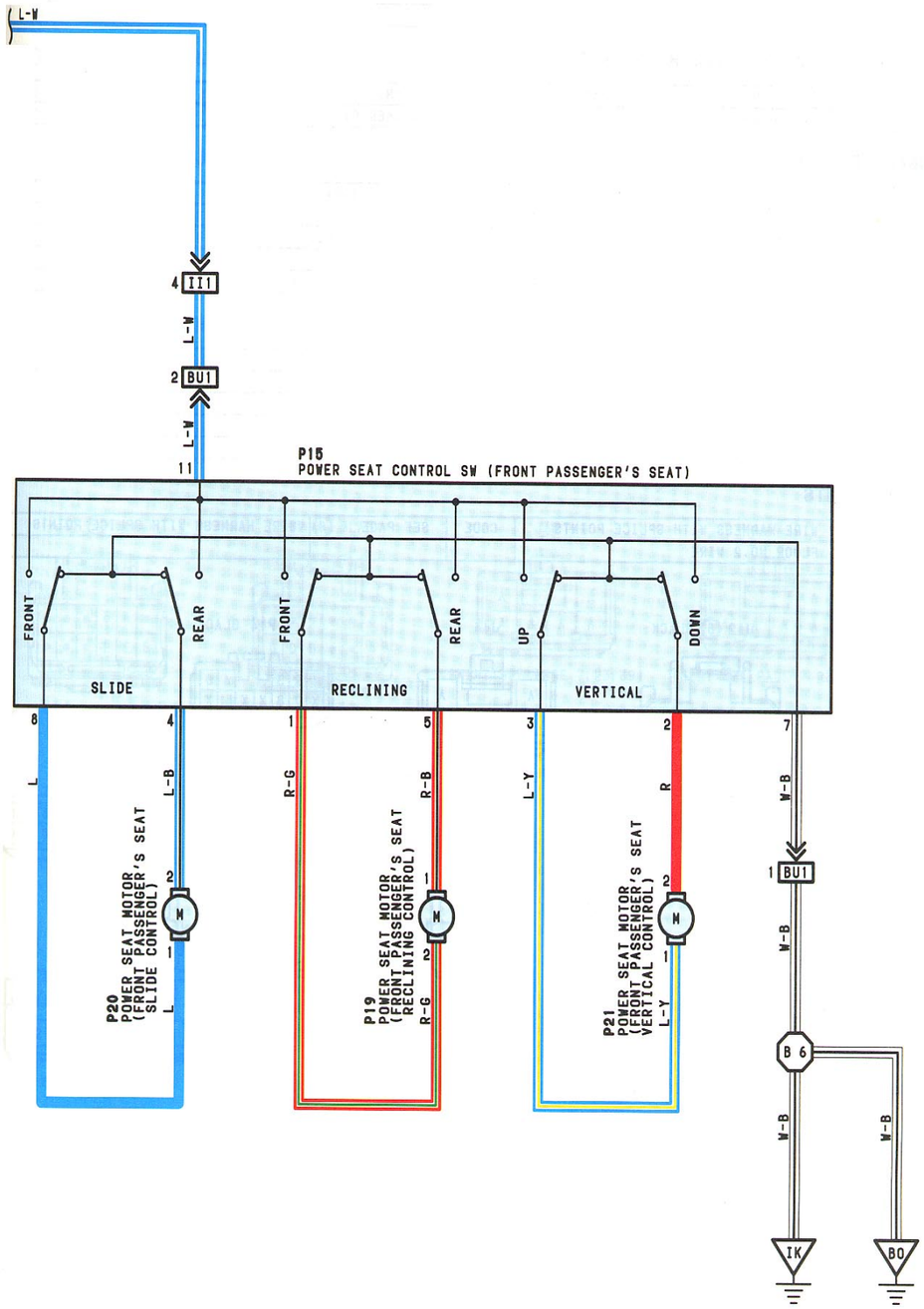

POWER SEAT(LHD)

SERVICE HINTS

P14,P15 POWER SEAT CONTROL SW (DRIVER'S, FRONT PASSENGER'S SEAT)

11-GROUND:ALWAYS APPROX. 12 VOLTS
7-GROUND:ALWAYS CONTINUITY

○ : PARTS LOCATION

CODE		SEE PAGE	CODE	SEE PAGE	CODE	SEE PAGE
J11	A	66(LHD)	P15	70(LHD)	P19	70(LHD)
J12	B	66(LHD)	P16	70(LHD)	P20	70(LHD)
J43		68(LHD)	P17	70(LHD)	P21	70(LHD)
P14		70(LHD)	P18	70(LHD)		

: JUNCTION BLOCK AND WIRE HARNESS CONNECTOR

CODE	SEE PAGE	JUNCTION BLOCK AND WIRE HARNESS (CONNECTOR LOCATION)
1D	52(LHD)	INSTRUMENT PANEL WIRE AND INSTRUMENT PANEL J/B (LOWER FINISH PANEL)

: CONNECTOR JOINING WIRE HARNESS AND WIRE HARNESS

CODE	SEE PAGE	JOINING WIRE HARNESS AND WIRE HARNESS (CONNECTOR LOCATION)
IF2	86(LHD)	FLOOR WIRE AND INSTRUMENT PANEL WIRE (LEFT KICK PANEL)
II1	88(LHD)	FLOOR NO.2 WIRE AND INSTRUMENT PANEL WIRE (RIGHT KICK PANEL)
BT1	92(LHD)	FLOOR WIRE AND SEAT NO.1 WIRE (UNDER THE DRIVER'S SEAT)
BU1	92(LHD)	FLOOR NO.2 WIRE AND SEAT NO.2 WIRE (UNDER THE PASSENGER'S SEAT)

▽ : GROUND POINTS

CODE	SEE PAGE	GROUND POINTS LOCATION
IK	86(LHD)	RIGHT KICK PANEL
BL	90(LHD)	UNDER THE LEFT CENTER PILLAR
BM	90(LHD)	BACK PANEL CENTER
BO	90(LHD)	UNDER THE RIGHT CENTER PILLAR

⬡ : SPLICE POINTS

CODE	SEE PAGE	WIRE HARNESS WITH SPLICE POINTS	CODE	SEE PAGE	WIRE HARNESS WITH SPLICE POINTS
B 6	90(LHD)	FLOOR NO.2 WIRE			

J11 Ⓐ BLACK

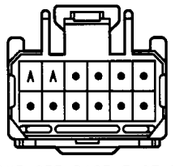

(HINT:SEE PAGE 7,23,39)

J12 Ⓑ BLACK

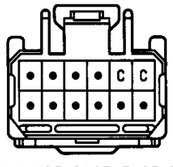

(HINT:SEE PAGE 7,23,39)

J43

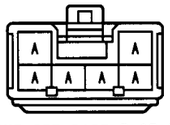

(HINT:SEE PAGE 7,23,39)

P14 BLACK

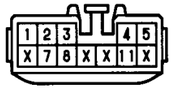

P15 BLACK

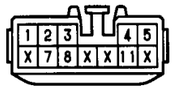

P16

P17

P18

P19

P20

P21

POWER SEAT(RHD)

SERVICE HINTS

P14,P15 POWER SEAT CONTROL SW (DRIVER'S, FRONT PASSENGER'S SEAT)

11-GROUND:ALWAYS APPROX. 12 VOLTS
7-GROUND:ALWAYS CONTINUITY

○ : PARTS LOCATION

CODE		SEE PAGE	CODE	SEE PAGE	CODE	SEE PAGE
J31	A	78(RHD)	P14	70(RHD)	P18	70(RHD)
J32	B	78(RHD)	P15	70(RHD)	P19	70(RHD)
J45		80(RHD)	P16	70(RHD)	P20	70(RHD)
J47		80(RHD)	P17	70(RHD)	P21	70(RHD)

: JUNCTION BLOCK AND WIRE HARNESS CONNECTOR

CODE	SEE PAGE	JUNCTION BLOCK AND WIRE HARNESS (CONNECTOR LOCATION)
1D	54(RHD)	INSTRUMENT PANEL WIRE AND INSTRUMENT PANEL J/B (LOWER FINISH PANEL)

: CONNECTOR JOINING WIRE HARNESS AND WIRE HARNESS

CODE	SEE PAGE	JOINING WIRE HARNESS AND WIRE HARNESS (CONNECTOR LOCATION)
IF2	98(RHD)	FLOOR WIRE AND INSTRUMENT PANEL WIRE (RIGHT KICK PANEL)
II3	100(RHD)	FLOOR NO.2 WIRE AND INSTRUMENT PANEL WIRE (LEFT KICK PANEL)
BT2	92(RHD)	FLOOR WIRE AND SEAT NO.1 WIRE (UNDER THE DRIVER'S SEAT)
BU2	92(RHD)	FLOOR NO.2 WIRE AND SEAT NO.2 WIRE (UNDER THE PASSENGER'S SEAT)

▽ : GROUND POINTS

CODE	SEE PAGE	GROUND POINTS LOCATION
IK	98(RHD)	LEFT KICK PANEL
BL	102(RHD)	UNDER THE LEFT CENTER PILLAR
BM	102(RHD)	BACK PANEL CENTER
BO	102(RHD)	UNDER THE RIGHT CENTER PILLAR

J31 Ⓐ BLACK

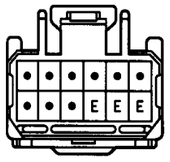

(HINT:SEE PAGE 7,23,39)

J32 Ⓑ BLACK

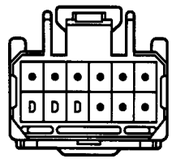

(HINT:SEE PAGE 7,23,39)

J45

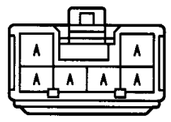

(HINT:SEE PAGE 7,23,39)

J47

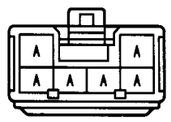

(HINT:SEE PAGE 7,23,39)

P14 BLACK

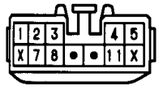

P15 BLACK

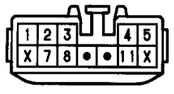

P16

P17

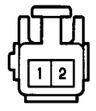

P18

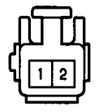

P19

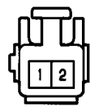

P20

P21

SEAT HEATER(LHD)

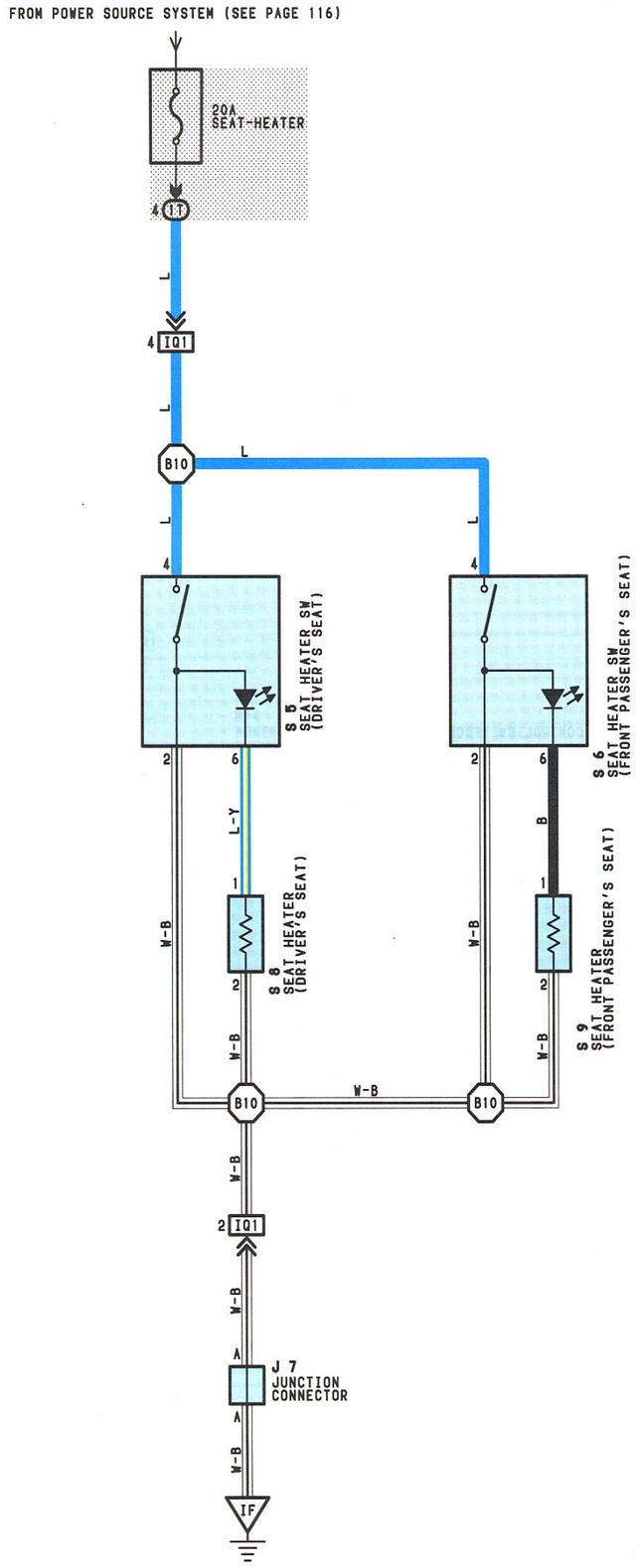

SERVICE HINTS

S 5, S 6 SEAT HEATER SW (DRIVER'S, FRONT PASSENGER'S SEAT)

4-GROUND: APPROX. 12 VOLTS WITH THE IGNITION SW AT ON POSITION
2-GROUND: ALWAYS CONTINUITY

: PARTS LOCATION

CODE	SEE PAGE	CODE	SEE PAGE	CODE	SEE PAGE
J 7	66(LHD)	S 6	66(LHD)	S 9	66(LHD)
S 5	66(LHD)	S 8	66(LHD)		

: JUNCTION BLOCK AND WIRE HARNESS CONNECTOR

CODE	SEE PAGE	JUNCTION BLOCK AND WIRE HARNESS (CONNECTOR LOCATION)
1T	52(LHD)	INSTRUMENT PANEL WIRE AND INSTRUMENT PANEL J/B (LOWER FINISH PANEL)

: CONNECTOR JOINING WIRE HARNESS AND WIRE HARNESS

CODE	SEE PAGE	JOINING WIRE HARNESS AND WIRE HARNESS (CONNECTOR LOCATION)
IQ1	88(LHD)	FLOOR NO.3 WIRE AND INSTRUMENT PANEL WIRE (UNDER THE CONSOLE BOX)

: GROUND POINTS

CODE	SEE PAGE	GROUND POINTS LOCATION
IF	86(LHD)	LEFT KICK PANEL

: SPLICE POINTS

CODE	SEE PAGE	WIRE HARNESS WITH SPLICE POINTS	CODE	SEE PAGE	WIRE HARNESS WITH SPLICE POINTS
B10	92(LHD)	FLOOR NO.3 WIRE			

J 7 ORANGE

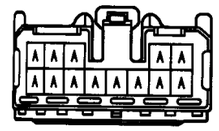

(HINT: SEE PAGE 7, 23, 39)

S 5 BLUE

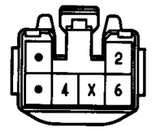

S 6 BLACK

S 8 BLUE

S 9

NOTICE: When inspecting or repairing the SRS, perform the operation in accordance with the following precautionary instructions and the procedure and precautions in the Repair Manual.

- Malfunction symptoms of the SRS are difficult to confirm, so the DTCs become the most important source of information when troubleshooting. When troubleshooting the SRS, always inspect the DTCs before disconnecting the battery.
- **Work must be started after 90 seconds from when the ignition switch is turned to the "LOCK" position and the negative (−) terminal cable is disconnected from the battery.**
  (The SRS is equipped with a back-up power source so that if work is started within 90 seconds of disconnecting the negative (−) terminal cable of the battery, the SRS may be deployed.)
  When the negative (−) terminal cable is disconnected from the battery, the memory of the clock and audio system will be canceled. So before starting work, make a record of the contents memorized by the audio memory system. When work is finished, reset the audio systems as before and adjust the clock. To avoid erasing the memory of each memory system, never use a back-up power supply from outside the vehicle.
- Even in cases of a minor collision where the SRS does not deploy, the steering wheel pad, front passenger airbag assembly, and airbag sensor assembly should be inspected.
- Never use SRS parts from another vehicle. When replacing parts, replace them with new parts.
- Before repairs, remove the airbag sensor if shocks are likely to be applied to the sensor during repairs.
- Never disassemble and repair the steering wheel pad, front passenger airbag assembly, or airbag sensor assembly in order to reuse it.
- If the steering wheel pad, front passenger airbag assembly or airbag sensor assembly has been dropped, or if there are cracks, dents or other defects in the case, bracket or connector, replace them with new ones.
- Do not expose the steering wheel pad, front passenger airbag assembly, or airbag sensor assembly directly to hot air or flames.
- Use a volt/ohmmeter with high impedance (10 kΩ/V minimum) for troubleshooting the system's electrical circuits.
- Information labels are attached to the periphery of the SRS components. Follow the instructions on the notices.
- After work on the SRS is completed, check the SRS warning light.
- If the vehicle is equipped with a mobile communication system, refer to the precaution in the IN section of the Repair Manual.

The SRS has connectors which possess the functions described below:

1. SRS ACTIVATION PREVENTION MECHANISM
   Each connector contains a short spring plate. When the connector is disconnected, the short spring plate automatically connects the power source and grounding terminals of the squib to preclude a potential difference between the terminals.

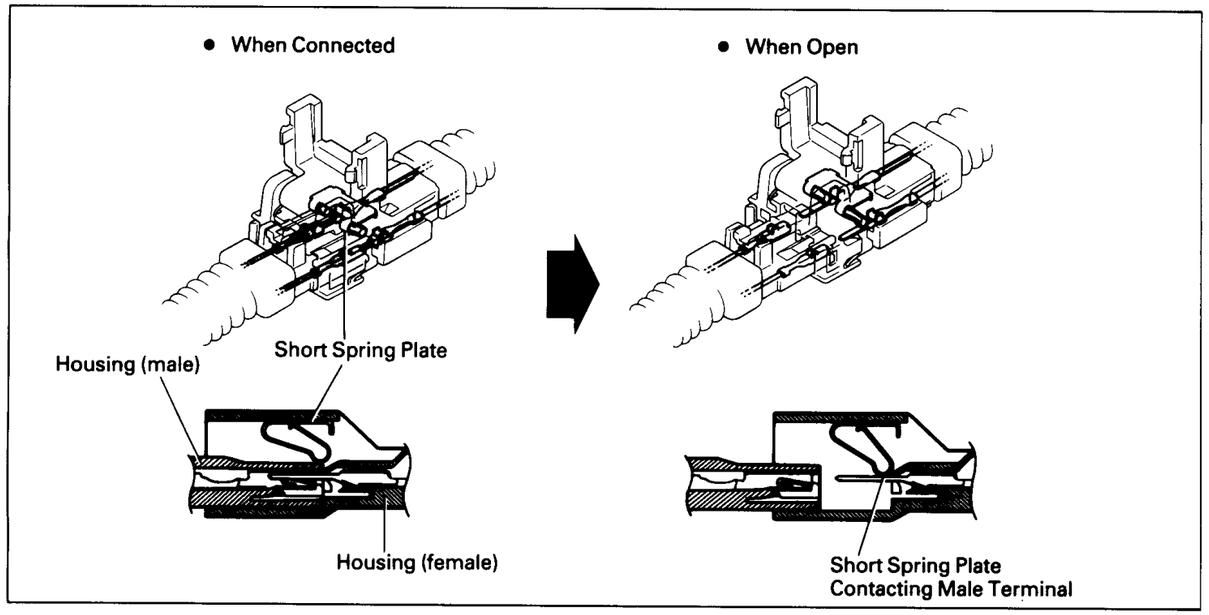

2. ELECTRICAL CONNECTION CHECK MECHANISM
   This mechanism is designed to electrically check if connectors are connected correctly and completely.
   The electrical connection check mechanism is designed so that the connection detection pin connects with the diagnosis terminals when the connector housing lock is in the locked condition.

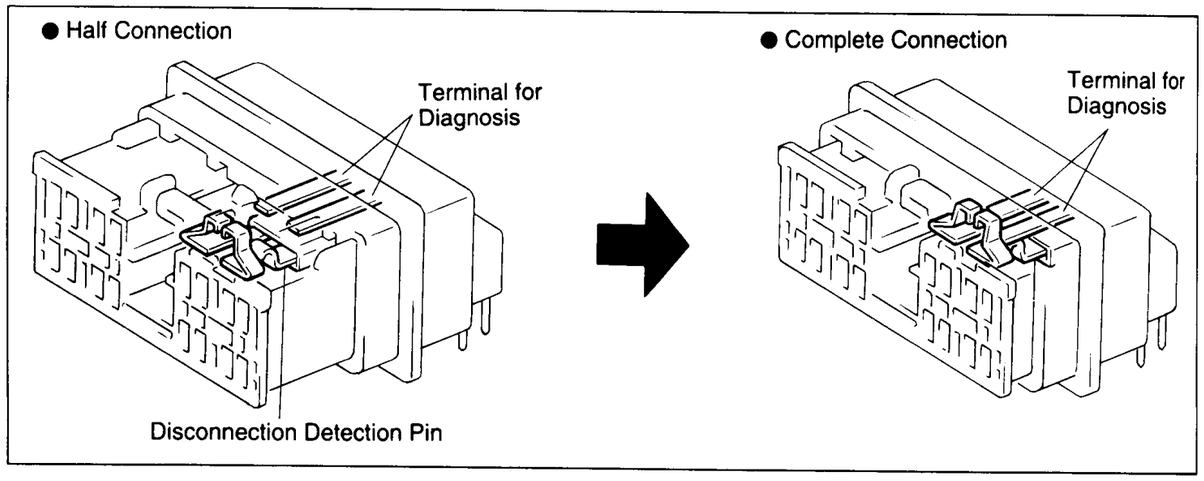

3. CONNECTOR TWIN-LOCK MECHANISM
   With this mechanism connectors (male and female connectors) are locked by two locking devices to increase connection reliability. If the primary lock is incomplete, ribs interfere and prevent the secondary lock.

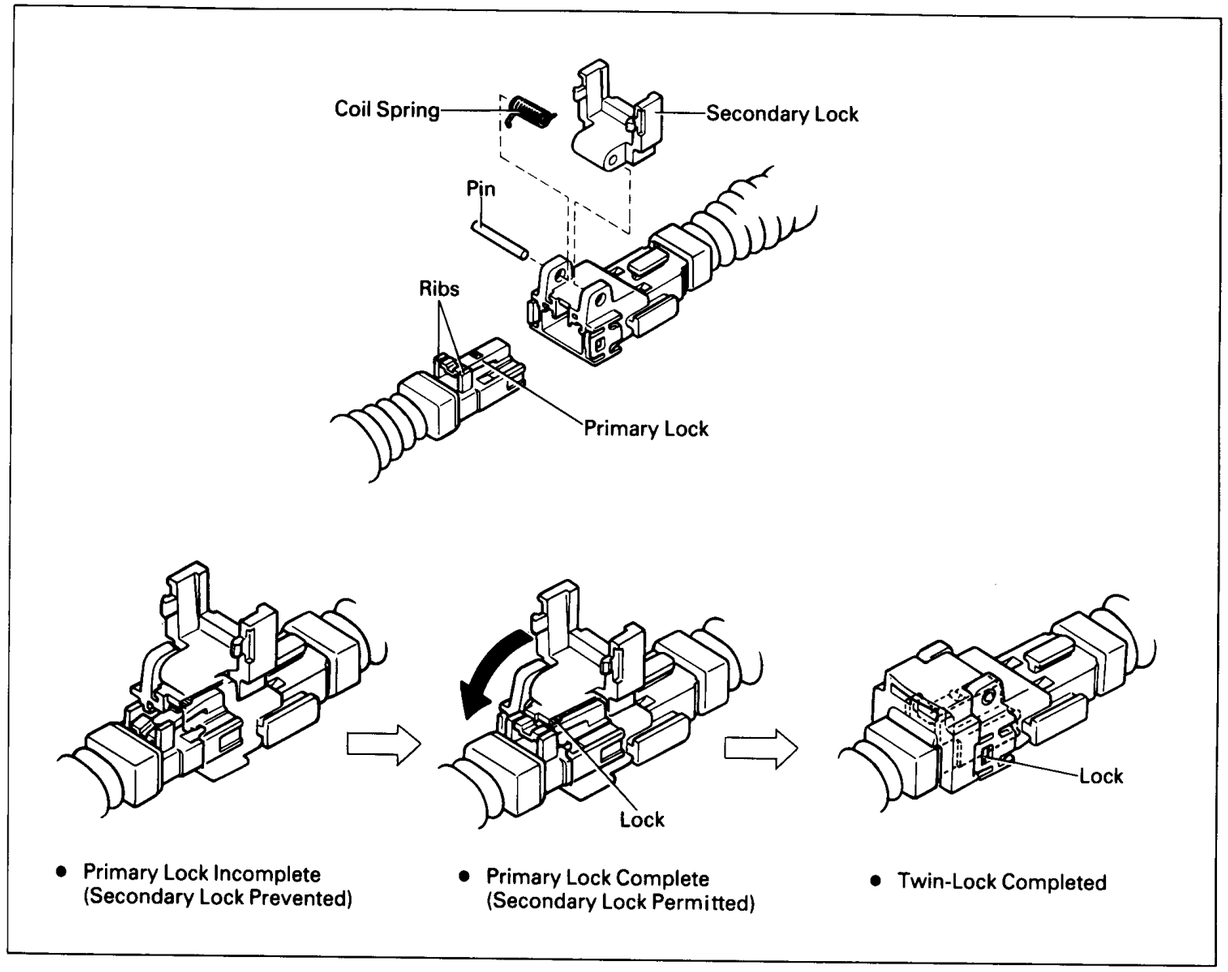

SRS(LHD)

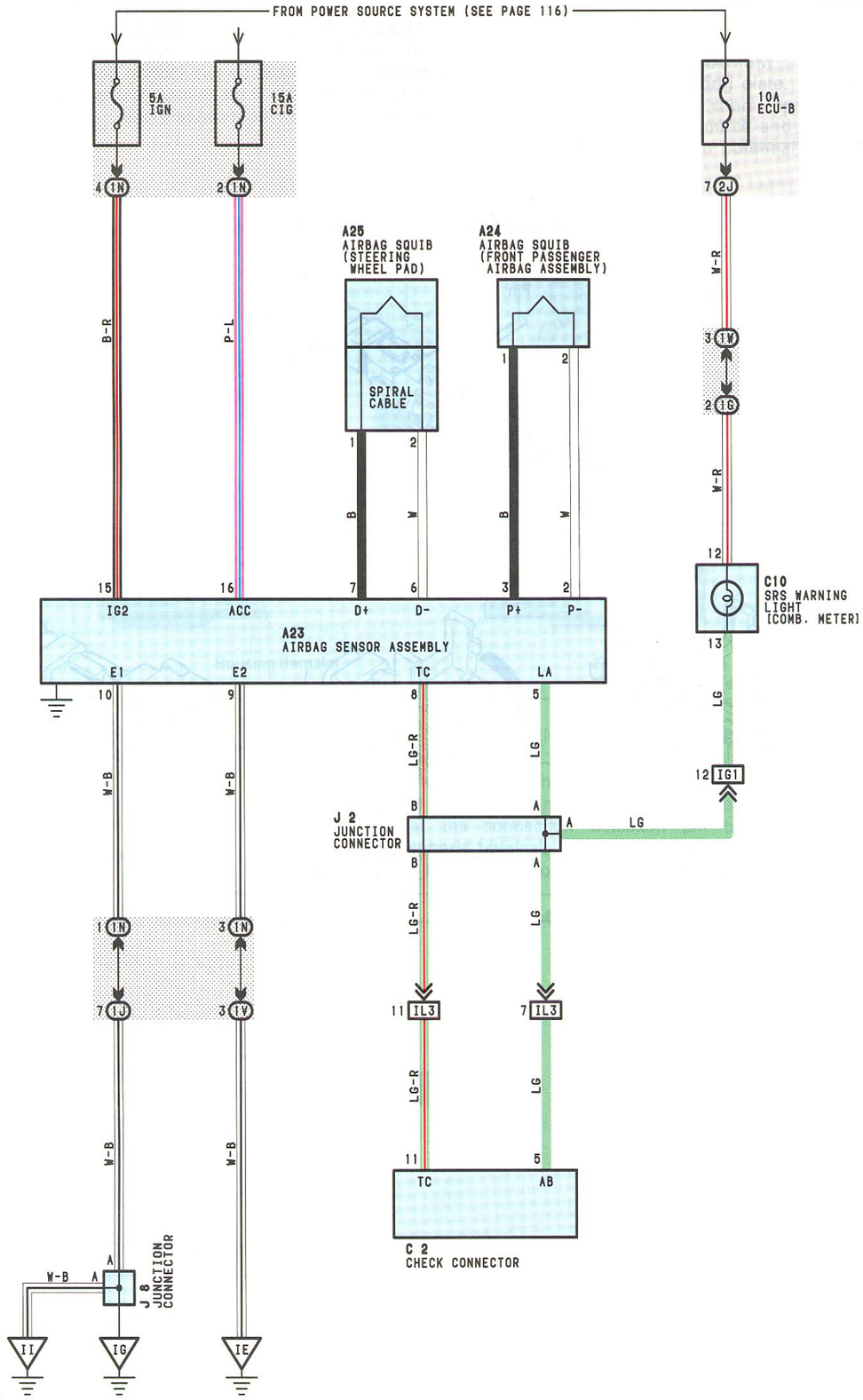

SYSTEM OUTLINE

THE SRS IS A DRIVER AND PASSENGER PROTECTION DEVICE WHICH HAS A SUPPLEMENTAL ROLE TO THE SEAT BELTS.
WHEN THE IGNITION SW IS TURNED TO ACC OR ON, CURRENT FROM THE **CIG** FUSE FLOWS TO **TERMINAL 16** OF THE AIRBAG SENSOR ASSEMBLY. ONLY WHEN THE IGNITION SW IS ON DOES THE CURRENT FROM THE **IGN** FUSE TO **TERMINAL 15**.
IF AN ACCIDENT OCCURS WHILE DRIVING, WHEN THE FRONTAL IMPACT EXCEEDS A SET LEVEL, CURRENT FROM THE **CIG** OR **IGN** FUSE FLOWS TO **TERMINALS 3** AND **7** OF THE AIRBAG SENSOR ASSEMBLY → **TERMINAL 1** OF THE AIRBAG SQUIBS → **TERMINALS 2** → **TERMINALS 2** AND **6** OF THE AIRBAG SENSOR ASSEMBLY → **TERMINAL 9** OR **TERMINAL 10** OR **BODY GROUND** → **GROUND**, SO THAT THE CURRENT FLOWS TO THE AIRBAG SQUIBS AND CAUSES IT TO OPERATE.
THE AIRBAG STORED INSIDE THE STEERING WHEEL PAD IS INSTANTANEOUSLY EXPANDED TO SOFTEN THE SHOCK TO THE DRIVER.
THE AIRBAG STORED INSIDE THE PASSENGER'S INSTRUMENT PANEL IS INSTANTANEOUSLY EXPANDED TO SOFTEN THE SHOCK TO THE PASSENGER.

○ : PARTS LOCATION

CODE	SEE PAGE	CODE	SEE PAGE	CODE	SEE PAGE
A23	64(LHD)	C 2	60(1NZ-FE LHD)	J 2	66(LHD)
A24	64(LHD)		62(5S-FE LHD)	J 8	66(LHD)
A25	64(LHD)	C10	64(LHD)		

⬭ : JUNCTION BLOCK AND WIRE HARNESS CONNECTOR

CODE	SEE PAGE	JUNCTION BLOCK AND WIRE HARNESS (CONNECTOR LOCATION)
1G	52(LHD)	INSTRUMENT PANEL WIRE AND INSTRUMENT PANEL J/B (LOWER FINISH PANEL)
1J	52(LHD)	COWL WIRE AND INSTRUMENT PANEL J/B (LOWER FINISH PANEL)
1N		
1V		
1W		
2J	56	COWL WIRE AND ENGINE ROOM J/B NO.2 (ENGINE COMPARTMENT LEFT)

□ : CONNECTOR JOINING WIRE HARNESS AND WIRE HARNESS

CODE	SEE PAGE	JOINING WIRE HARNESS AND WIRE HARNESS (CONNECTOR LOCATION)
I01	86(LHD)	INSTRUMENT PANEL WIRE AND COWL WIRE (LOWER FINISH PANEL)
IL3	88(LHD)	ENGINE WIRE AND COWL WIRE (UNDER THE BLOWER MOTOR)

▽ : GROUND POINTS

CODE	SEE PAGE	GROUND POINTS LOCATION
IE	86(LHD)	COWL SIDE PANEL LH
IG	86(LHD)	INSTRUMENT PANEL BRACE LH
II	86(LHD)	COWL SIDE PANEL RH

A23 YELLOW

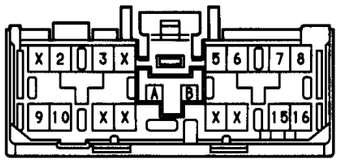

A24 YELLOW

A25 YELLOW

(1MZ-FE) C 2 BLACK

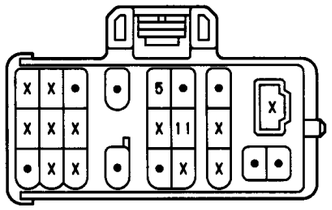

(5S-FE) C 2 BLACK

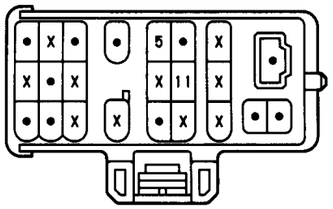

C10

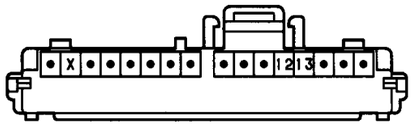

J 2 GRAY

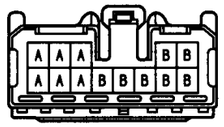

(HINT:SEE PAGE 7,23,39)

J 8

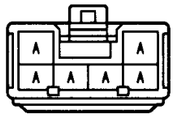

(HINT:SEE PAGE 7,23,39)

RADIO AND PLAYER(LHD)

● 1:6 SPEAKER
● 2:4 SPEAKER

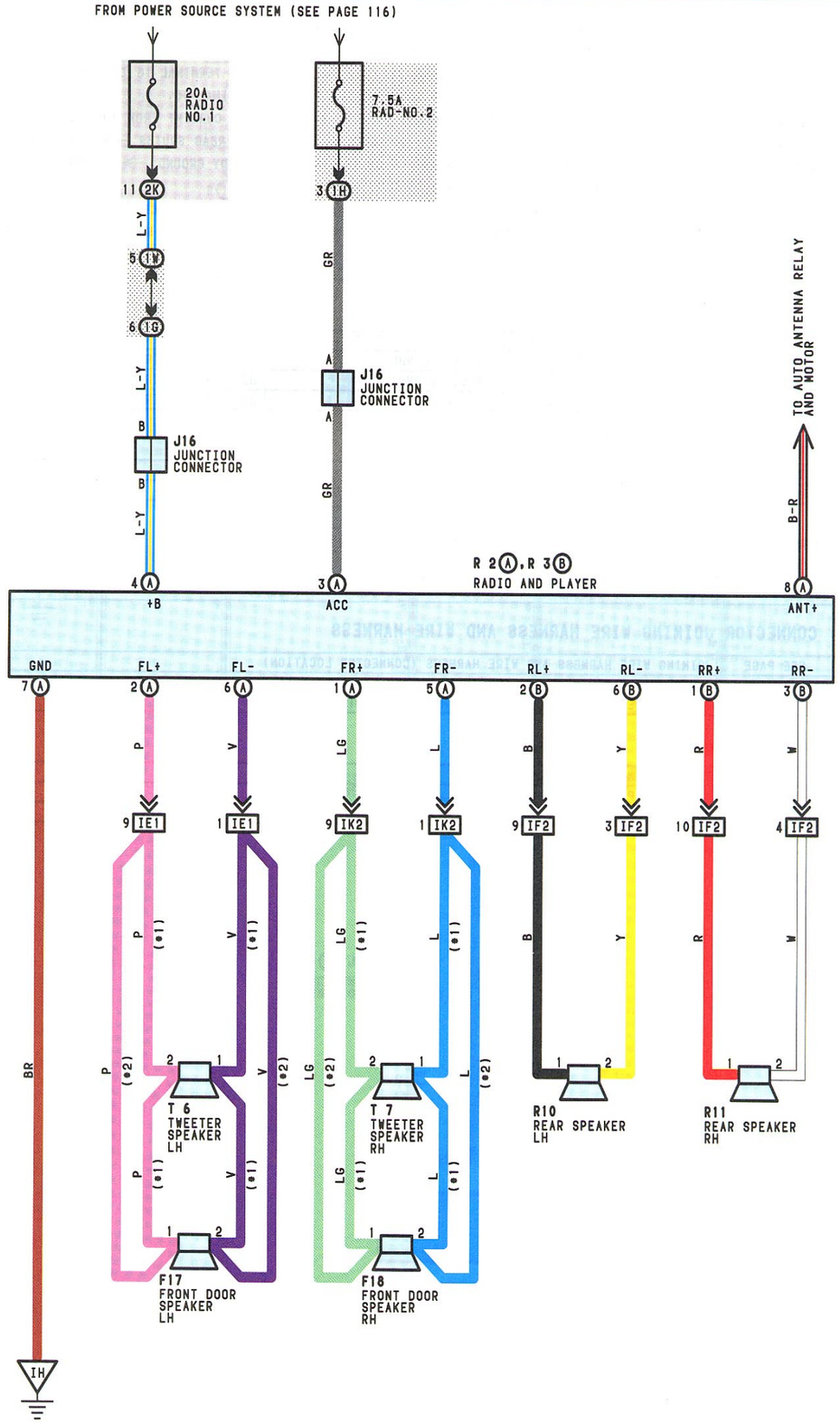

SERVICE HINTS

R 2 Ⓐ RADIO AND PLAYER

Ⓐ 4-GROUND: ALWAYS APPROX. 12 VOLTS
Ⓐ 3-GROUND: APPROX. 12 VOLTS WITH THE IGNITION SW AT ACC OR ON POSITION
Ⓐ 7-GROUND: ALWAYS CONTINUITY

○ : PARTS LOCATION

CODE	SEE PAGE	CODE		SEE PAGE	CODE	SEE PAGE
F17	68(LHD)	R 2	A	66(LHD)	R11	68(LHD)
F18	68(LHD)	R 3	B	66(LHD)	T 6	68(LHD)
J16	66(LHD)	R10		68(LHD)	T 7	68(LHD)

: JUNCTION BLOCK AND WIRE HARNESS CONNECTOR

CODE	SEE PAGE	JUNCTION BLOCK AND WIRE HARNESS (CONNECTOR LOCATION)
1G	52(LHD)	INSTRUMENT PANEL WIRE AND INSTRUMENT PANEL J/B (LOWER FINISH PANEL)
1H		
1W	52(LHD)	COWL WIRE AND INSTRUMENT PANEL J/B (LOWER FINISH PANEL)
2K	56	COWL WIRE AND ENGINE ROOM J/B NO.2 (ENGINE COMPARTMENT LEFT)

: CONNECTOR JOINING WIRE HARNESS AND WIRE HARNESS

CODE	SEE PAGE	JOINING WIRE HARNESS AND WIRE HARNESS (CONNECTOR LOCATION)
IE1	86(LHD)	FRONT DOOR LH WIRE AND INSTRUMENT PANEL WIRE (LEFT KICK PANEL)
IF2	86(LHD)	FLOOR WIRE AND INSTRUMENT PANEL WIRE (LEFT KICK PANEL)
IK2	88(LHD)	FRONT DOOR RH WIRE AND INSTRUMENT PANEL WIRE (RIGHT KICK PANEL)

▽ : GROUND POINTS

CODE	SEE PAGE	GROUND POINTS LOCATION
IH	86(LHD)	INSTRUMENT PANEL BRACE RH

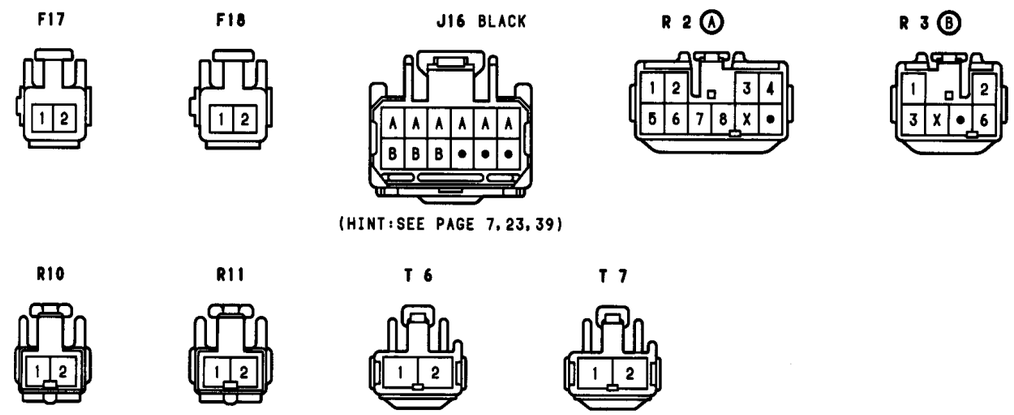

AUTO ANTENNA(LHD)

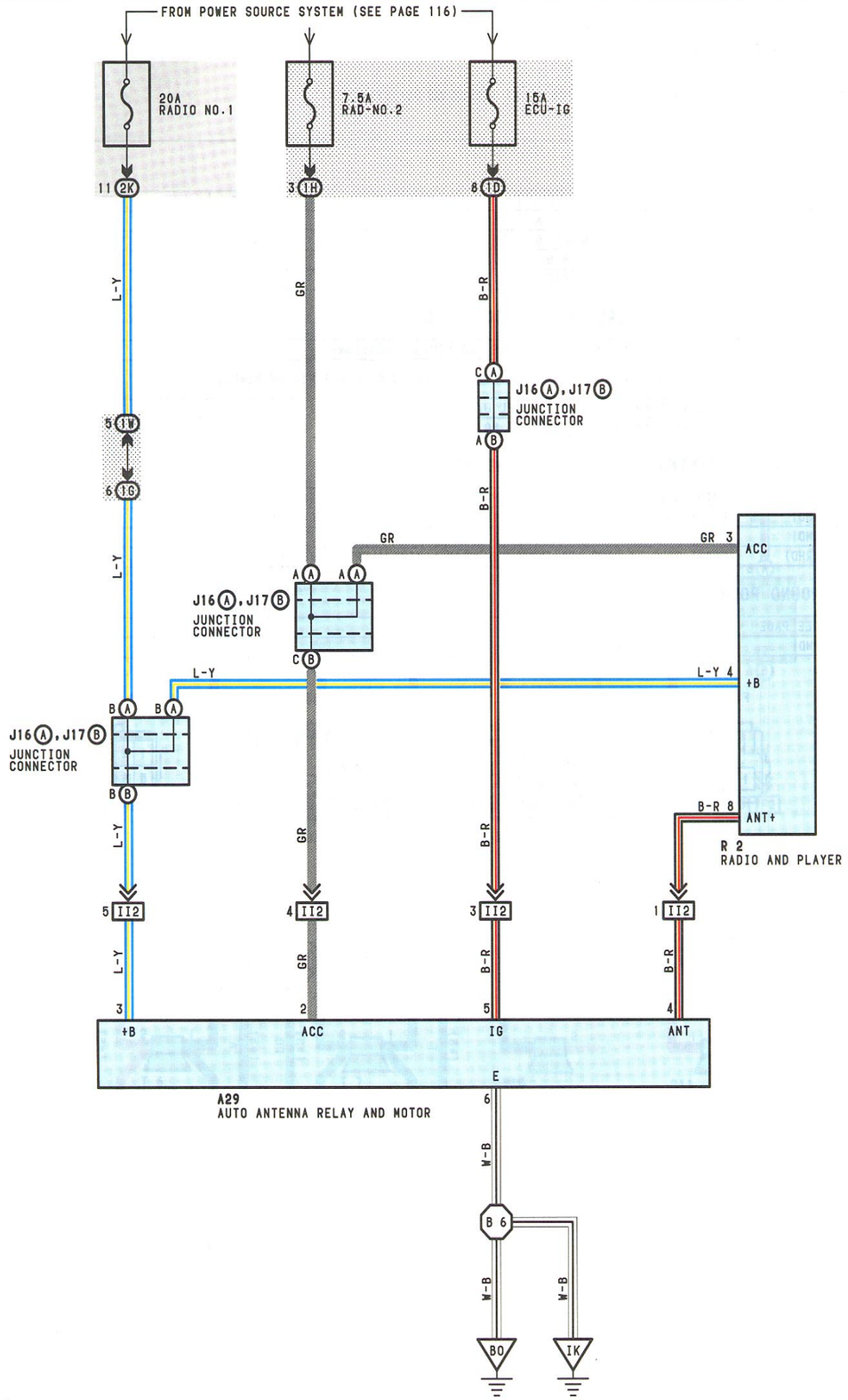

SERVICE HINTS

A29 AUTO ANTENNA RELAY AND MOTOR

3-GROUND:ALWAYS APPROX. 12 VOLTS
5-GROUND:APPROX. 12 VOLTS WITH THE IGNITION SW AT ON POSITION
2-GROUND:APPROX. 12 VOLTS WITH THE IGNITION SW AT ACC OR ON POSITION
6-GROUND:ALWAYS CONTINUITY

○ : PARTS LOCATION

CODE		SEE PAGE	CODE		SEE PAGE	CODE	SEE PAGE
A29		68(LHD)	J17	B	66(LHD)		
J16	A	66(LHD)	R 2		66(LHD)		

◎ : JUNCTION BLOCK AND WIRE HARNESS CONNECTOR

CODE	SEE PAGE	JUNCTION BLOCK AND WIRE HARNESS (CONNECTOR LOCATION)
1D	52(LHD)	INSTRUMENT PANEL WIRE AND INSTRUMENT PANEL J/B (LOWER FINISH PANEL)
1G		
1H		
1W	52(LHD)	COWL WIRE AND INSTRUMENT PANEL J/B (LOWER FINISH PANEL)
2K	56	COWL WIRE AND ENGINE ROOM J/B NO.2 (ENGINE COMPARTMENT LEFT)

□ : CONNECTOR JOINING WIRE HARNESS AND WIRE HARNESS

CODE	SEE PAGE	JOINING WIRE HARNESS AND WIRE HARNESS (CONNECTOR LOCATION)
II2	88(LHD)	FLOOR NO.2 WIRE AND INSTRUMENT PANEL WIRE (RIGHT KICK PANEL)

▽ : GROUND POINTS

CODE	SEE PAGE	GROUND POINTS LOCATION
IK	86(LHD)	RIGHT KICK PANEL
BO	90(LHD)	UNDER THE RIGHT CENTER PILLAR

⬡ : SPLICE POINTS

CODE	SEE PAGE	WIRE HARNESS WITH SPLICE POINTS	CODE	SEE PAGE	WIRE HARNESS WITH SPLICE POINTS
B 6	90(LHD)	FLOOR NO.2 WIRE			

A29

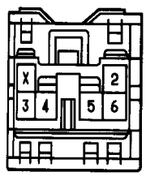

J16 Ⓐ BLACK

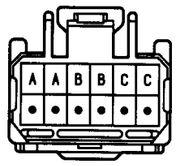

(HINT:SEE PAGE 7,23,39)

J17 Ⓑ BLACK

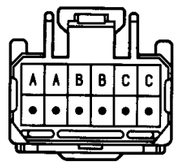

(HINT:SEE PAGE 7,23,39)

R 2

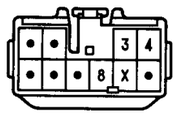

CRUISE CONTROL(LHD)

SYSTEM OUTLINE

CURRENT IS APPLIED AT ALL TIMES THROUGH THE **STOP** FUSE TO **TERMINAL 2** OF THE STOP LIGHT SW, AND ALSO THROUGH THE **ECU-B** FUSE TO **TERMINAL 1** OF THE CRUISE CONTROL ECU.
WITH THE IGNITION SW TURNED TO ON, CURRENT FLOWS THROUGH THE **GAUGE** FUSE TO **TERMINAL** Ⓒ**7** OF THE COMBINATION METER AND THE CURRENT THROUGH THE **ECU-IG** FUSE FLOWS TO **TERMINAL 9** OF THE CRUISE CONTROL ECU.
WHEN THE IGNITION SW IS ON AND THE CRUISE CONTROL MAIN SW IS TURNED ON, A SIGNAL IS INPUT FROM **TERMINAL 5** OF THE CRUISE CONTROL SW TO **TERMINAL 11** OF THE CRUISE CONTROL ECU. AS A RESULT, THE CRUISE CONTROL ECU FUNCTIONS AND THE CURRENT FLOWS FROM THE **ECU-IG** FUSE TO **TERMINAL 9** OF THE CRUISE CONTROL ECU → **TERMINAL 16** → **GROUND**, AND THE CRUISE CONTROL SYSTEM IS IN A CONDITION READY FOR OPERATION.
AT THE SAME TIME, THE CURRENT THROUGH THE **GAUGE** FUSE FLOWS TO **TERMINAL** Ⓒ**7** OF THE CRUISE CONTROL INDICATOR LIGHT → **TERMINAL** Ⓒ**10** → **TERMINAL 4** OF THE CRUISE CONTROL ECU → **TERMINAL 16** → **GROUND**, CAUSING THE CRUISE CONTROL INDICATOR LIGHT TO LIGHT UP, INDICATING THAT THE CRUISE CONTROL IS READY FOR OPERATION.

1. SET OPERATION

WHEN THE CRUISE CONTROL MAIN SW IS TURNED ON AND THE SET SW IS PUSHED WITH THE VEHICLE SPEED WITHIN THE SET LIMIT (APPROX. **40** KM/H, **25** MPH TO **200** KM/H, **124** MPH), A SIGNAL IS INPUT TO **TERMINAL 10** OF THE CRUISE CONTROL ECU AND THE VEHICLE SPEED AT THE TIME THE SET SW IS RELEASED IS MEMORIZED IN THE ECU AS THE SET SPEED.

2. SET SPEED CONTROL

DURING CRUISE CONTROL DRIVING, THE ECU COMPARES THE SET SPEED MEMORIZED IN THE ECU WITH THE ACTUAL VEHICLE SPEED INPUT INTO **TERMINAL 12** OF THE CRUISE CONTROL ECU FROM THE SPEED SENSOR, AND CONTROLS THE CRUISE CONTROL ACTUATOR TO MAINTAIN THE SET SPEED.
WHEN THE ACTUAL SPEED IS LOWER THAN THE SET SPEED, THE ECU CAUSES THE CURRENT TO THE CRUISE CONTROL ACTUATOR TO FLOW FROM **TERMINAL 15** OF THE CRUISE CONTROL ECU → **TERMINAL 1** OF THE CRUISE CONTROL ACTUATOR → **TERMINAL 2** → **TERMINAL 7** OF THE CRUISE CONTROL ECU. AS A RESULT, THE MOTOR IN THE CRUISE CONTROL ACTUATOR IS ROTATED TO OPEN THE THROTTLE VALVE AND THE THROTTLE CABLE IS PULLED TO INCREASE THE VEHICLE SPEED. WHEN THE ACTUAL DRIVING SPEED IS HIGHER THAN THE SET SPEED, THE CURRENT TO THE CRUISE CONTROL ACTUATOR FLOWS FROM **TERMINAL 7** OF THE ECU → **TERMINAL 2** OF THE CRUISE CONTROL ACTUATOR → **TERMINAL 1** → **TERMINAL 15** OF THE CRUISE CONTROL ECU.
THIS CAUSES THE MOTOR IN THE CRUISE CONTROL ACTUATOR TO ROTATE TO CLOSE THE THROTTLE VALVE AND RETURN THE THROTTLE CABLE TO DECREASE THE VEHICLE SPEED.

3. COAST CONTROL

DURING THE CRUISE CONTROL DRIVING, WHILE THE COAST SW IS ON, THE CRUISE CONTROL ACTUATOR RETURNS THE THROTTLE CABLE TO CLOSE THE THROTTLE VALVE AND DECREASE THE DRIVING SPEED. THE VEHICLE SPEED WHEN THE COAST SW IS TURNED OFF IS MEMORIZED AND THE VEHICLE CONTINUES AT THE NEW SET SPEED.

4. ACCEL CONTROL

DURING CRUISE CONTROL DRIVING, WHILE THE ACCEL SW IS TURNED ON, THE CRUISE CONTROL ACTUATOR PULLS THE THROTTLE CABLE TO OPEN THE THROTTLE VALVE AND INCREASE THE DRIVING SPEED.
THE VEHICLE SPEED WHEN THE ACCEL SW IS TURNED OFF IS MEMORIZED AND THE VEHICLE CONTINUES AT THE NEW SET SPEED.

5. RESUME CONTROL

UNLESS THE VEHICLE SPEED FALLS BELOW THE MINIMUM SPEED LIMIT (APPROX. **40** KM/H, **25** MPH) AFTER CANCELING THE SET SPEED BY THE CANCEL SW, PUSHING THE RESUME SW WILL CAUSE THE VEHICLE TO RESUME THE SPEED SET BEFORE CANCELLATION.

6. MANUAL CANCEL MECHANISM

IF ANY OF THE FOLLOWING OPERATIONS OCCURS DURING CRUISE CONTROL OPERATION, THE MAGNETIC CLUTCH OF THE ACTUATOR TURNS OFF AND THE MOTOR ROTATES TO CLOSE THE THROTTLE VALVE AND THE CRUISE CONTROL IS RELEASED.

- PLACING THE SHIFT LEVER EXCEPT "D" POSITION (NEUTRAL START SW EXCEPT "D" POSITION)). "SIGNAL IS NOT INPUT TO **TERMINAL 3** OF THE ECU" (A/T)
- DEPRESSED THE CLUTCH PEDAL (CRUISE CONTROL CLUTCH SW OFF), "SIGNAL IS NOT INPUT TO **TERMINAL 3** OF THE ECU" (M/T)
- DEPRESSED THE BRAKE PEDAL (STOP LIGHT SW ON). "SIGNAL INPUT TO **TERMINAL 2** OF THE ECU"
- PUSHING THE CANCEL SW (CANCEL SW ON). "SIGNAL INPUT TO **TERMINAL 4** OF THE ECU"

7. AUTO CANCEL FUNCTION

A) IF ANY OF THE FOLLOWING OPERATING CONDITIONS OCCURS DURING CRUISE CONTROL OPERATION, THE SET SPEED IS ERASED, THE CURRENT FLOW TO THE MAGNETIC CLUTCH IS STOPPED AND THE CRUISE CONTROL IS RELEASED. (MAIN SW TURNS OFF).
WHEN THIS OCCURS, THE IGNITION SW MUST BE TURNED OFF ONCE BEFORE THE MAIN SW WILL TURN ON.

- WHEN CURRENT CONTINUED TO FLOW TO THE MOTOR INSIDE THE ACTUATOR IN THE THROTTLE VALVE "OPEN" DIRECTION.
- THE MOTOR DOES NOT OPERATE DESPITE THE MOTOR DRIVE SIGNAL BEING OUTPUT.

B) IF ANY OF THE FOLLOWING OPERATING CONDITIONS OCCURS DURING CRUISE CONTROL OPERATION, THE SET SPEED IS ERASED, THE CURRENT FLOW TO THE MAGNETIC CLUTCH IS STOPPED AND THE CRUISE CONTROL IS RELEASED. (MAIN SW TURN OFF).
WHEN THIS OCCURS, THE CANCEL STATE IS CLEARED AS THE MAIN SW WILL TURN ON AGAIN.

- OVER CURRENT TO TRANSISTOR DRIVING THE MOTOR AND/OR THE MAGNETIC CLUTCH.
- OPEN CIRCUIT IN THE MAGNETIC CLUTCH.
- MOMENTARY INTERRUPTION OF VEHICLE SPEED SIGNAL.
- SHORT CIRCUIT IN THE CRUISE CONTROL SW.
- WHEN THE VEHICLE SPEED FALLS MORE THAN **16** KM/H (**10** MPH) BELOW THE SET SPEED, E.G. ON AN UPWARD SLOPE.

C) IF ANY OF THE FOLLOWING CONDITIONS OCCURS DURING CRUISE CONTROL OPERATION, THE SET SPEED IS ERASED AND THE CRUISE CONTROL IS RELEASED. (THE POWER TO THE MAGNETIC CLUTCH IS CUT OFF UNTIL THE SET SW IS "ON" AGAIN.)

- WHEN THE VEHICLE SPEED FALLS BELOW THE MINIMUM SPEED LIMIT, APPROX. **40** KM/H (**25** MPH)
- WHEN POWER TO THE CRUISE CONTROL SYSTEM IS MOMENTARILY CUT OFF.

D) IF ANY OF THE FOLLOWING CONDITIONS OCCURS DURING CRUISE CONTROL OPERATION, THE CRUISE CONTROL IS RELEASED.

- OPEN THE CIRCUIT FOR **TERMINAL 2** OF THE STOP LIGHT SW.

8. AUTOMATIC TRANSMISSION CONTROL FUNCTION

- IN OVERDRIVE. IF THE VEHICLE SPEED BECOMES LOWER THAN THE OVERDRIVE CUT SPEED (SET SPEED MINUS APPROX. **4** KM/H, **2.5** MPH) DURING CRUISE CONTROL OPERATION, SUCH AS DRIVING UP A HILL, THE OVERDRIVE IS RELEASED AND THE POWER INCREASED TO PREVENT A REDUCTION IN VEHICLE SPEED.
- AFTER RELEASING THE OVERDRIVE, VEHICLE SPEED BECOMES HIGHER THAN THE OVERDRIVE RETURN SPEED (SET SPEED MINUS APPROX. **2** KM/H, **1.2** MPH) AND THE ECU JUDGES BY THAT THE UPWARD SLOPE HAS FINISHED, THE OVERDRIVE IS RESUMED AFTER APPROXIMATELY **2** SECONDS.

CRUISE CONTROL(LHD)

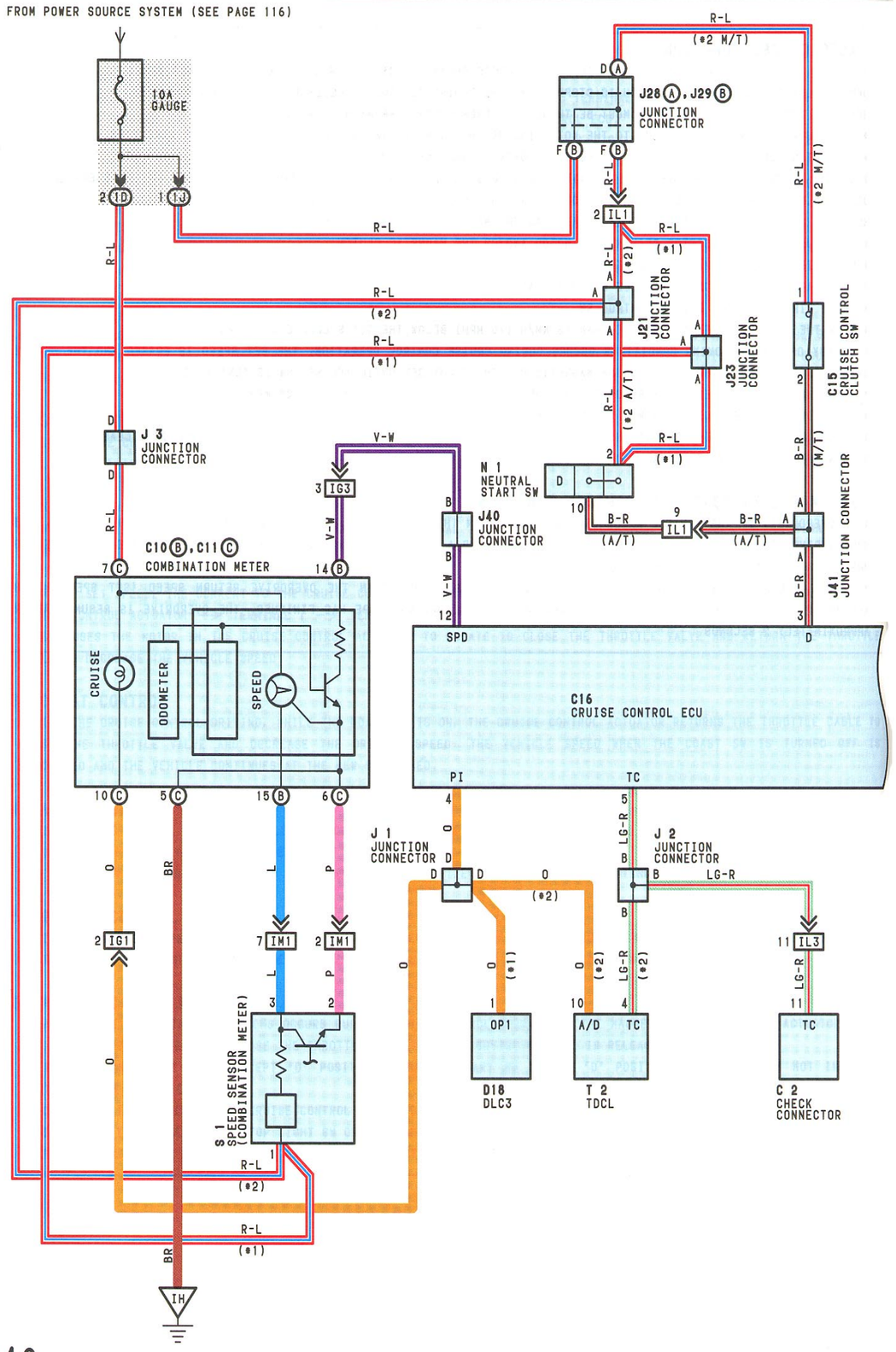

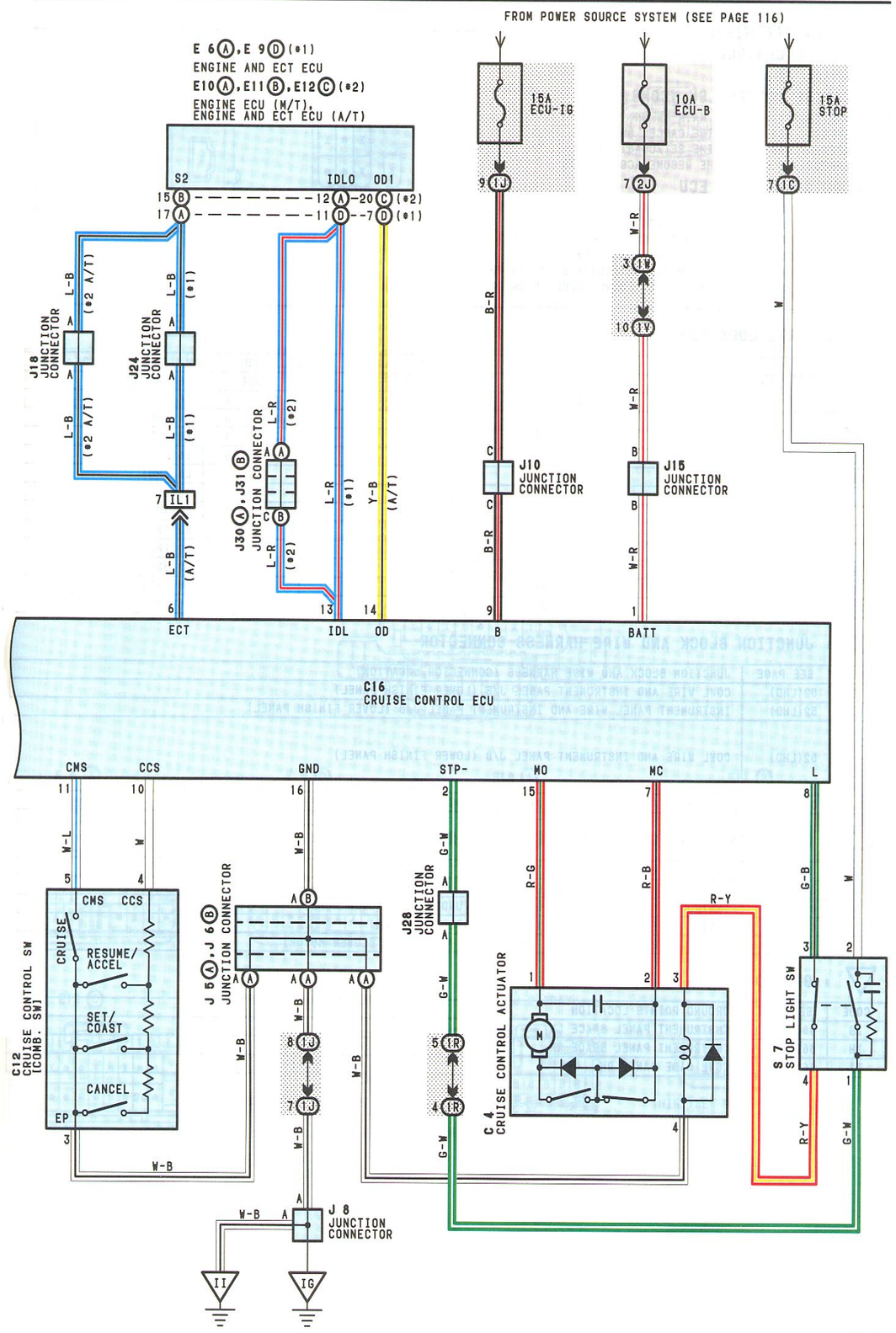

CRUISE CONTROL(LHD)

SERVICE HINTS

C 4 CRUISE CONTROL ACTUATOR

3-4:APPROX. 38 Ω

C12 CRUISE CONTROL SW [COMB. SW]

5-3:CONTINUITY WITH THE MAIN SW ON
4-3:APPROX. 418 Ω WITH THE CANCEL SW ON
APPROX. 198 Ω WITH THE SET/COAST SW ON
APPROX. 68 Ω WITH THE RESUME/ACCEL SW ON

C16 CRUISE CONTROL ECU

9-GROUND:APPROX. 12 VOLTS WITH THE IGNITION SW AT **ON** POSITION
1-GROUND:ALWAYS APPROX. 12 VOLTS
12-GROUND:4 PULSES WITH 1 ROTATION OF THE ROTOR SHAFT
10-GROUND:APPROX. 418 Ω WITH THE CANCEL SW ON IN THE CONTROL SW
APPROX. 198 Ω WITH THE SET/COAST SW ON IN THE CONTROL SW
APPROX. 68 Ω WITH THE RESUME/ACCEL SW ON IN THE CONTROL SW

○ : PARTS LOCATION

CODE		SEE PAGE	CODE		SEE PAGE	CODE		SEE PAGE
C 2		60(1MZ-FE LHD)	E11	B	64(5S-FE LHD)	J24		66(LHD)
		62(5S-FE LHD)	E12	C	64(5S-FE LHD)	J28	A	66(LHD)
C 4		60(1MZ-FE LHD)	J 1		66(LHD)	J29	B	66(LHD)
		62(5S-FE LHD)	J 2		66(LHD)	J30	A	66(LHD)
C10	B	64(LHD)	J 3		66(LHD)	J31	B	66(LHD)
C11	C	64(LHD)	J 5	A	66(LHD)	J40		66(LHD)
C12		64(LHD)	J 6	B	66(LHD)	J41		66(LHD)
C15		64(LHD)	J 8		66(LHD)	N 1		60(1MZ-FE LHD)
C16		64(LHD)	J10		66(LHD)			62(5S-FE LHD)
D18		64(LHD)	J15		66(LHD)	S 1		60(1MZ-FE LHD)
E 6	A	64(1MZ-FE LHD)	J18		66(LHD)			62(5S-FE LHD)
E 9	D	64(1MZ-FE LHD)	J21		66(LHD)	S 7		66(LHD)
E10	A	64(5S-FE LHD)	J23		66(LHD)	T 2		66(LHD)

: JUNCTION BLOCK AND WIRE HARNESS CONNECTOR

CODE	SEE PAGE	JUNCTION BLOCK AND WIRE HARNESS (CONNECTOR LOCATION)
1C	52(LHD)	COWL WIRE AND INSTRUMENT PANEL J/B (LOWER FINISH PANEL)
1D	52(LHD)	INSTRUMENT PANEL WIRE AND INSTRUMENT PANEL J/B (LOWER FINISH PANEL)
1J	52(LHD)	COWL WIRE AND INSTRUMENT PANEL J/B (LOWER FINISH PANEL)
1R		
1V		
1W		
2J	56	COWL WIRE AND ENGINE ROOM J/B NO.2 (ENGINE COMPARTMENT LEFT)

▭ : CONNECTOR JOINING WIRE HARNESS AND WIRE HARNESS

CODE	SEE PAGE	JOINING WIRE HARNESS AND WIRE HARNESS (CONNECTOR LOCATION)
IG1	86(LHD)	INSTRUMENT PANEL WIRE AND COWL WIRE (LOWER FINISH PANEL)
IG3	86(LHD)	INSTRUMENT PANEL WIRE AND COWL WIRE (UNDER THE BLOWER MOTOR)
IL1	88(LHD)	ENGINE WIRE AND COWL WIRE (UNDER THE BLOWER MOTOR)
IM1	88(LHD)	ENGINE WIRE AND INSTRUMENT PANEL WIRE (UNDER THE BLOWER MOTOR)

▽ : GROUND POINTS

CODE	SEE PAGE	GROUND POINTS LOCATION
IG	86(LHD)	INSTRUMENT PANEL BRACE LH
IH	86(LHD)	INSTRUMENT PANEL BRACE RH
II	86(LHD)	COWL SIDE PANEL RH

(1MZ-FE) C 2 BLACK

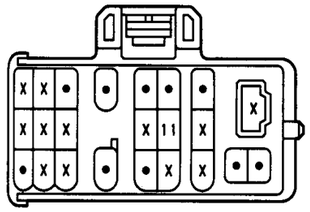

(5S-FE) C 2 BLACK

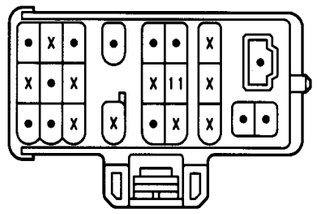

C 4 BLACK

C10 Ⓑ

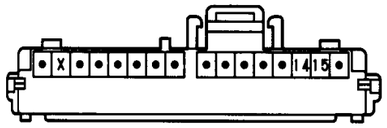

C11 Ⓒ BROWN

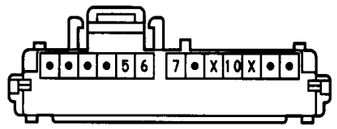

C12 BLACK

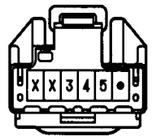

C15

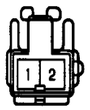

C16

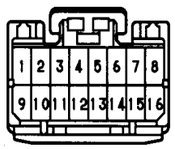

D18

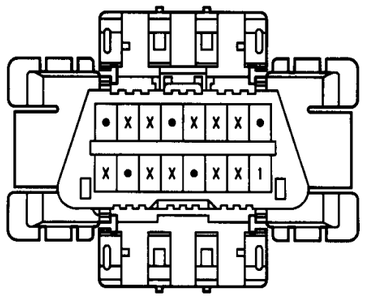

E 6 Ⓐ

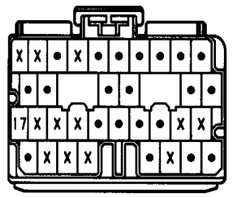

E 9 Ⓓ

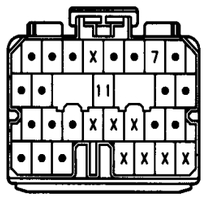

E10 Ⓐ

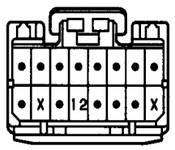

E11 Ⓑ

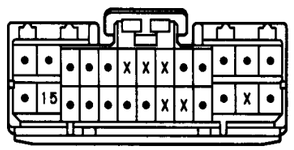

E12 Ⓒ

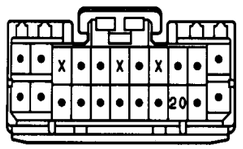

J 1 BLACK

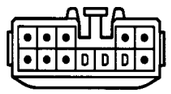

(HINT:SEE PAGE 7,23,39)

J 2 GRAY

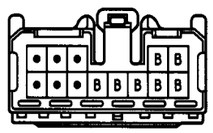

(HINT:SEE PAGE 7,23,39)

J 3 BLACK

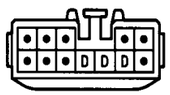

(HINT:SEE PAGE 7,23,39)

CRUISE CONTROL(LHD)

J 5 Ⓐ GRAY

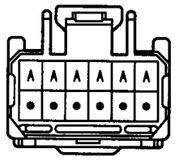

(HINT:SEE PAGE 7,23,39)

J 6 Ⓑ GRAY

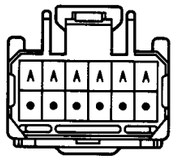

(HINT:SEE PAGE 7,23,39)

J 8

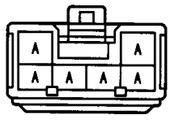

(HINT:SEE PAGE 7,23,39)

J10 BLACK

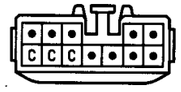

(HINT:SEE PAGE 7,23,39)

J15

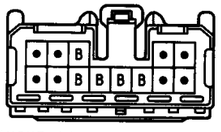

(HINT:SEE PAGE 7,23,39)

J18

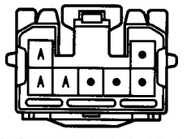

(HINT:SEE PAGE 7,23,39)

J21 GRAY

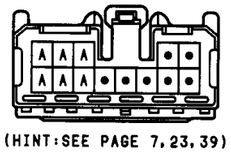

(HINT:SEE PAGE 7,23,39)

J23

(HINT:SEE PAGE 7,23,39)

J24

(HINT:SEE PAGE 7,23,39)

J28 Ⓐ

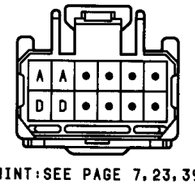

(HINT:SEE PAGE 7,23,39)

J29 Ⓑ

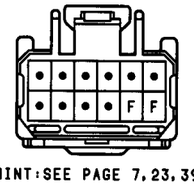

(HINT:SEE PAGE 7,23,39)

J30 Ⓐ

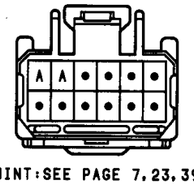

(HINT:SEE PAGE 7,23,39)

J31 Ⓑ

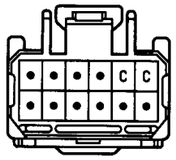

(HINT:SEE PAGE 7,23,39)

J40 GRAY

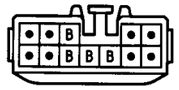

(HINT:SEE PAGE 7,23,39)

J41

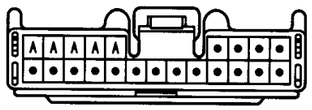

(HINT:SEE PAGE 7,23,39)

N 1 GRAY

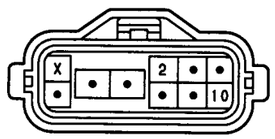

S 1 BLACK

S 7 BLUE

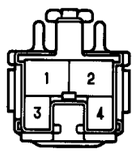

T 2 DARK GRAY

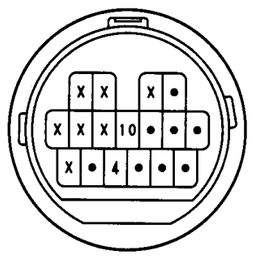

ECT AND A/T INDICATOR(1MZ-FE LHD)

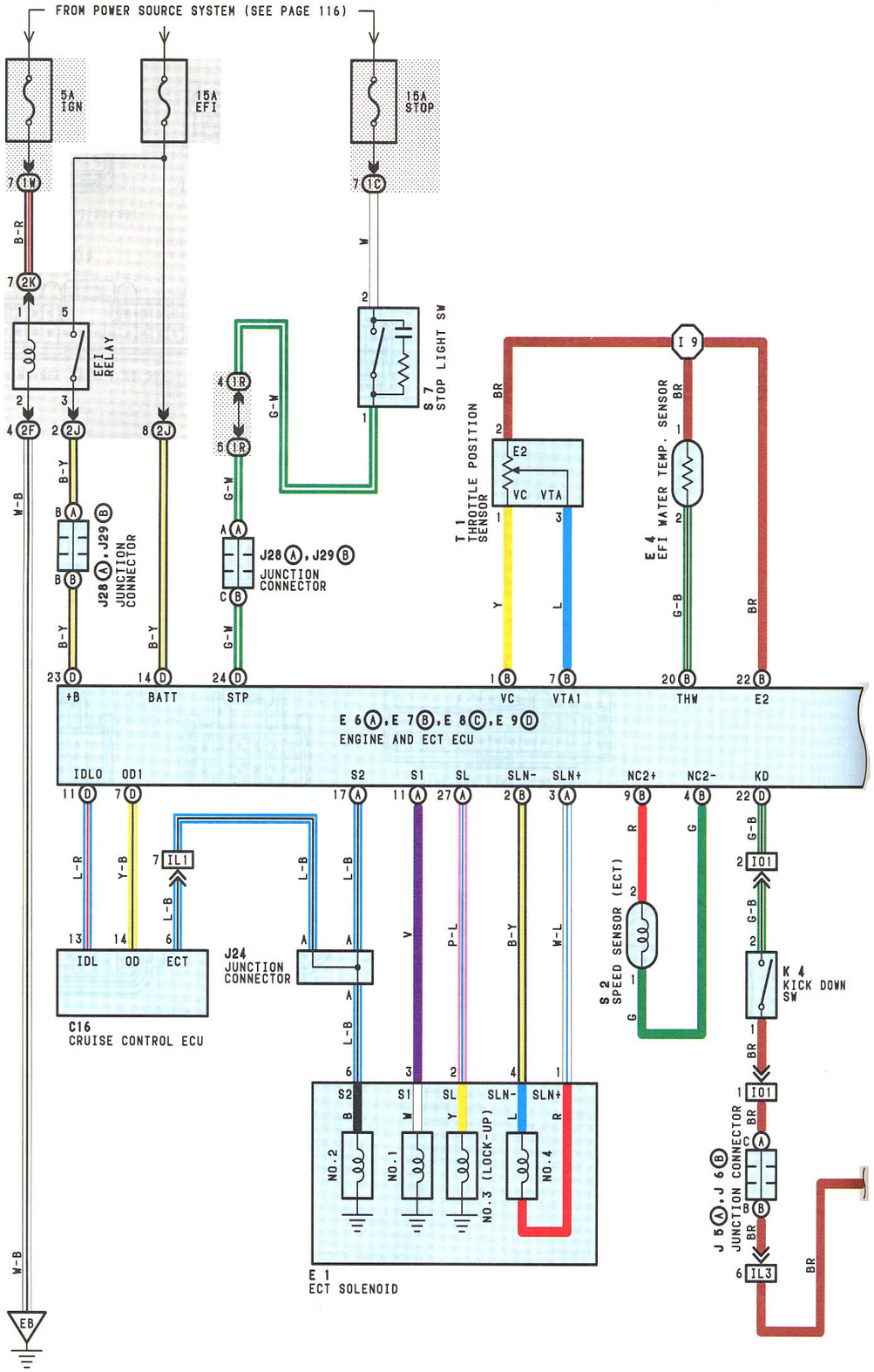

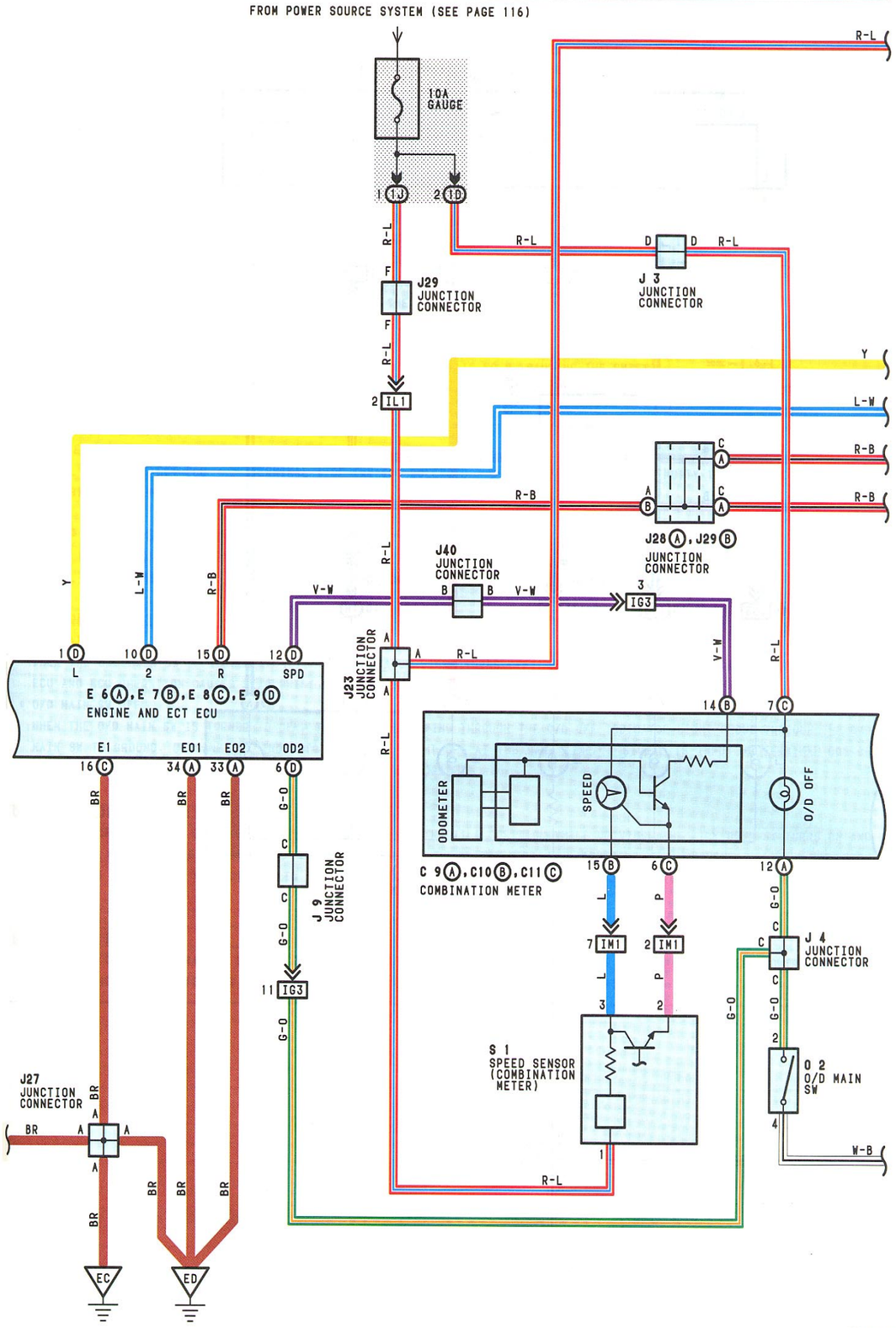

ECT AND A/T INDICATOR(1MZ-FE LHD)

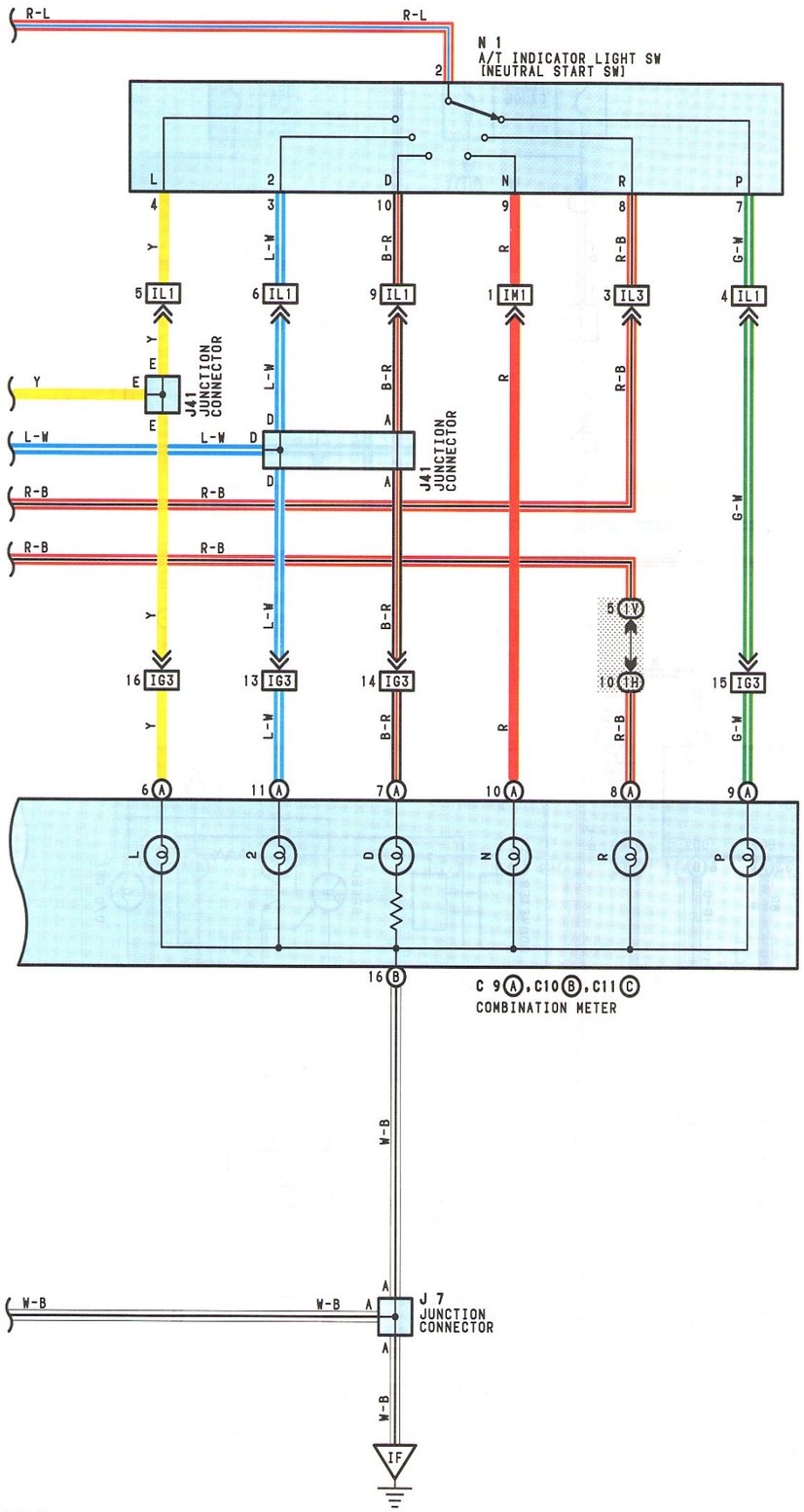

SYSTEM OUTLINE

THIS SYSTEM ELECTRICALLY CONTROLS THE LINE PRESSURE, THROTTLE PRESSURE, LOCK-UP PRESSURE AND ACCUMULATOR PRESSURE ETC. THROUGH THE SOLENOID VALVE. THE ECT IS A SYSTEM WHICH PRECISELY CONTROLS GEAR SHIFT TIMING AND LOCK-UP TIMING IN THE RESPONSE TO THE VEHICLE'S DRIVING CONDITIONS AND THE ENGINE OPERATING CONDITIONS DETECTED BY VARIOUS SENSORS, MAKING SMOOTH DRIVING POSSIBLE BY SHIFT SELECTION FOR EACH GEAR WHICH IS THE MOST APPROPRIATE TO THE DRIVING CONDITIONS AT THAT TIME, AND CONTROLS THE ENGINE TORQUE DUARING SHIFTING TO ACHIEVE OPTIMUM SHIFT FEELING.

1. GEAR SHIFT OPERATION

DURING DRIVING, THE ECU SELECTS THE SHIFT FOR EACH GEAR WHICH IS MOST APPROPRIATE TO THE DRIVING CONDITIONS, BASED ON INPUT SIGNALS FROM THE EFI WATER TEMP. SENSOR TO **TERMINAL THW** OF THE ECT ECU, AND ALSO THE INPUT SIGNALS TO **TERMINAL NC2+** OF THE ECT ECU FROM THE SPEED SENSOR DEVOTED TO THE ECT ECU. CURRENT IS THEN OUTPUT TO THE ECT SOLENOIDS. WHEN SHIFTING TO 1ST SPEED, CURRENT FLOWS FROM **TERMINAL S1** OF THE ECT ECU → **TERMINAL 3** OF THE ECT SOLENOIDS → **GROUND**, AND CONTINUITY TO THE NO.1 SOLENOID CAUSES THE SHIFT.

FOR 2ND SPEED, CURRENT FLOWS FROM **TERMINAL S1** OF THE ECT ECU → **TERMINAL 3** OF THE ECT SOLENOIDS → **GROUND**, AND FROM **TERMINAL S2** OF THE ECT ECU → **TERMINAL 1** OF THE ECT SOLENOIDS → **GROUND**, AND CONTINUITY TO SOLENOIDS NO.1 AND NO.2 CAUSES THE SHIFT.

FOR 3RD SPEED, THERE IS NO CONTINUITY TO NO.1 SOLENOID, ONLY TO NO.2, CAUSING THE SHIFT.

SHIFTING INTO 4TH SPEED (OVER DRIVE) TAKES PLACE WHEN THERE IS NO CONTINUITY TO EITHER NO.1 OR NO.2 SOLENOID.

2. LOCK-UP OPERATION

WHEN THE ECT ECU JUDGES FROM EACH SIGNAL THAT LOCK-UP OPERATION CONDITIONS HAVE BEEN MET, CURRENT FLOWS FROM **TERMINAL SL** OF THE ECT ECU → **TERMINAL 1** OF THE ECT SOLENOID → **GROUND**, CAUSING CONTINUITY TO THE LOCK-UP SOLENOID AND CAUSING LOCK-UP OPERATION.

3. STOP LIGHT SW CIRCUIT

IF THE BRAKE PEDAL IS DEPRESSED (STOP LIGHT SW ON) WHEN DRIVING IN LOCK-UP CONDITION, A SIGNAL IS INPUT TO **TERMINAL STP** OF THE ECT ECU, THE ECU OPERATES AND CONTINUITY TO THE LOCK-UP SOLENOID IS CUT.

4. OVERDRIVE CIRCUIT

- O/D MAIN SW ON
  WHEN THE O/D MAIN SW IS TURNED ON (O/D OFF INDICATOR LIGHT TURNS OFF), A SIGNAL IS INPUT TO **TERMINAL OD2** OF THE ECT ECU AND ECU OPERATION CAUSES GEAR SHIFT WHEN THE CONDITIONS FOR OVERDRIVE ARE MET.
- O/D MAIN SW OFF
  WHEN THE O/D MAIN SW IS TURNED TO OFF, THE CURRENT FLOWING THROUGH THE O/D OFF INDICATOR LIGHT FLOWS THROUGH THE O/D MAIN SW TO GROUND. CAUSING THE INDICATOR LIGHT TO LIGHT UP. AT THE SAME TIME, A SIGNAL IS INPUT TO **TERMINAL OD2** OF THE ECT ECU AND ECU OPERATION PREVENTS SHIFT INTO OVERDRIVE.

5. KICK DOWN OPERATION

WHEN THE ACCELERATOR IS DEPRESSED FURTHER THAN THE FULL THROTTLE POSITION WHILE DRIVING, THE KICK DOWN SW TURNS ON AND ITS SIGNAL IS INPUT TO **TERMINAL KD** OF THE ECT ECU. THEN, THE ECT ECU CONTROLS THE CURRENT WHICH FLOWS FROM **TERMINALS S1** AND **S2** OF THE ECT ECU TO THE NO.1 AND NO.2 SOLENOIDS AND SHIFTS DOWN BY TURNING THE SOLENOIDS ON AND OFF.

6. CRUISE CONTROL

WHEN CRUISE CONTROL OPERATION IS SELECTED A SIGNAL IS INPUT TO **TERMINAL OD1** OF THE ECT ECU FROM CRUISE CONTROL ECU. AS A RESULT, THE ECU OPERATES AND CONTROLS OVERDRIVE, LOCK-UP AND SO ON FOR SMOOTH DRIVING.

ECT AND A/T INDICATOR(1MZ-FE LHD)

SERVICE HINTS

E 6Ⓐ,E 7Ⓑ,E 8Ⓒ,E 9Ⓓ ENGINE AND ECT ECU

S1,S2-E1:9.0-14.0 VOLTS WITH THE SOLENOID ON
0-1.5 VOLTS WITH THE SOLENOID OFF
L-E1:7.5-14.0 VOLTS WITH THE IGNITION SW ON AND THE SHIFT LEVER AT L POSITION
2-E1:7.5-14.0 VOLTS WITH THE IGNITION SW ON AND THE SHIFT LEVER AT 2 POSITION
R-E1:7.5-14.0 VOLTS WITH THE IGNITION SW ON AND THE SHIFT LEVER AT R POSITION
STP-E1:9.0-14.0 VOLTS WITH THE IGNITION SW ON AND THE BRAKE PEDAL DEPRESSED
THW-E2:0.2-1.0 VOLTS WITH THE COOLANT TEMP. 80°C (176°F)
VTA1-E2:0.3-0.8 VOLTS WITH THE IGNITION SW ON AND THE THROTTLE VALVE FULLY CLOSED
3.2-4.9 VOLTS WITH THE IGNITION SW ON AND THE THROTTLE VALVE FULLY OPEN
VC-E2:4.5-5.5 VOLTS WITH THE IGNITION SW AT ON POSITION
OD1-E1:9.0-14.0 VOLTS WITH THE IGNITION SW AT ON POSITION
OD2-E1:9.0-14.0 VOLTS WITH THE IGNITION SW ON AND THE O/D MAIN SW TURNED OFF
0-3.0 VOLTS WITH THE IGNITION SW ON AND THE O/D MAIN SW TURNED ON
+B-E1:9.0-14.0 VOLTS WITH THE IGNITION SW AT ON POSITION

E 1 ECT SOLENOID

1,2,3-GROUND:EACH 11-15 Ω

O 2 O/D MAIN SW

2-4:CLOSED WITH THE O/D MAIN SW OFF, OPEN WITH THE O/D MAIN SW ON

○ : PARTS LOCATION

CODE		SEE PAGE	CODE		SEE PAGE	CODE		SEE PAGE
C 9	A	64(LHD)	J 3		66(LHD)	J29	B	66(LHD)
C10	B	64(LHD)	J 4		66(LHD)	J40		66(LHD)
C11	C	64(LHD)	J 5	A	66(LHD)	J41		66(LHD)
C16		64(LHD)	J 6	B	66(LHD)	K 4		66(LHD)
E 1		60(1MZ-FE LHD)	J 7		66(LHD)	N 1		60(1MZ-FE LHD)
E 4		60(1MZ-FE LHD)	J 9		66(LHD)	O 2		66(LHD)
E 6	A	64(1MZ-FE LHD)	J23		66(LHD)	S 1		60(1MZ-FE LHD)
E 7	B	64(1MZ-FE LHD)	J24		66(LHD)	S 2		60(1MZ-FE LHD)
E 8	C	64(1MZ-FE LHD)	J27		66(LHD)	S 7		66(LHD)
E 9	D	64(1MZ-FE LHD)	J28	A	66(LHD)	T 1		60(1MZ-FE LHD)

: JUNCTION BLOCK AND WIRE HARNESS CONNECTOR

CODE	SEE PAGE	JUNCTION BLOCK AND WIRE HARNESS (CONNECTOR LOCATION)
1D	52(LHD)	INSTRUMENT PANEL WIRE AND INSTRUMENT PANEL J/B (LOWER FINISH PANEL)
1H		
1J	52(LHD)	COWL WIRE AND INSTRUMENT PANEL J/B (LOWER FINISH PANEL)
1R		
1V		
1W		
2F	56	ENGINE ROOM MAIN WIRE AND ENGINE ROOM J/B NO.2 (ENGINE COMPARTMENT LEFT)
2J	56	COWL WIRE AND ENGINE ROOM J/B NO.2 (ENGINE COMPARTMENT LEFT)
2K		

▭ : CONNECTOR JOINING WIRE HARNESS AND WIRE HARNESS

CODE	SEE PAGE	JOINING WIRE HARNESS AND WIRE HARNESS (CONNECTOR LOCATION)
IG3	86(LHD)	INSTRUMENT PANEL WIRE AND COWL WIRE (UNDER THE BLOWER MOTOR)
IL1	88(LHD)	ENGINE WIRE AND COWL WIRE (UNDER THE BLOWER MOTOR)
IL3		
IM1	88(LHD)	ENGINE WIRE AND INSTRUMENT PANEL WIRE (UNDER THE BLOWER MOTOR)
IO1	88(LHD)	COWL WIRE AND SWITCH WIRE (INSTRUMENT PANEL BRACE LH)

▽ : GROUND POINTS

CODE	SEE PAGE	GROUND POINTS LOCATION
EB	82(1MZ-FE LHD)	BEHIND HEADLIGHT LH
EC	82(1MZ-FE LHD)	REAR SIDE OF THE SURGE TANK
ED	82(1MZ-FE LHD)	SURGE TANK RH
IF	86(LHD)	LEFT KICK PANEL

⬡ : SPLICE POINTS

CODE	SEE PAGE	WIRE HARNESS WITH SPLICE POINTS	CODE	SEE PAGE	WIRE HARNESS WITH SPLICE POINTS
I 9	88(LHD)	ENGINE WIRE			

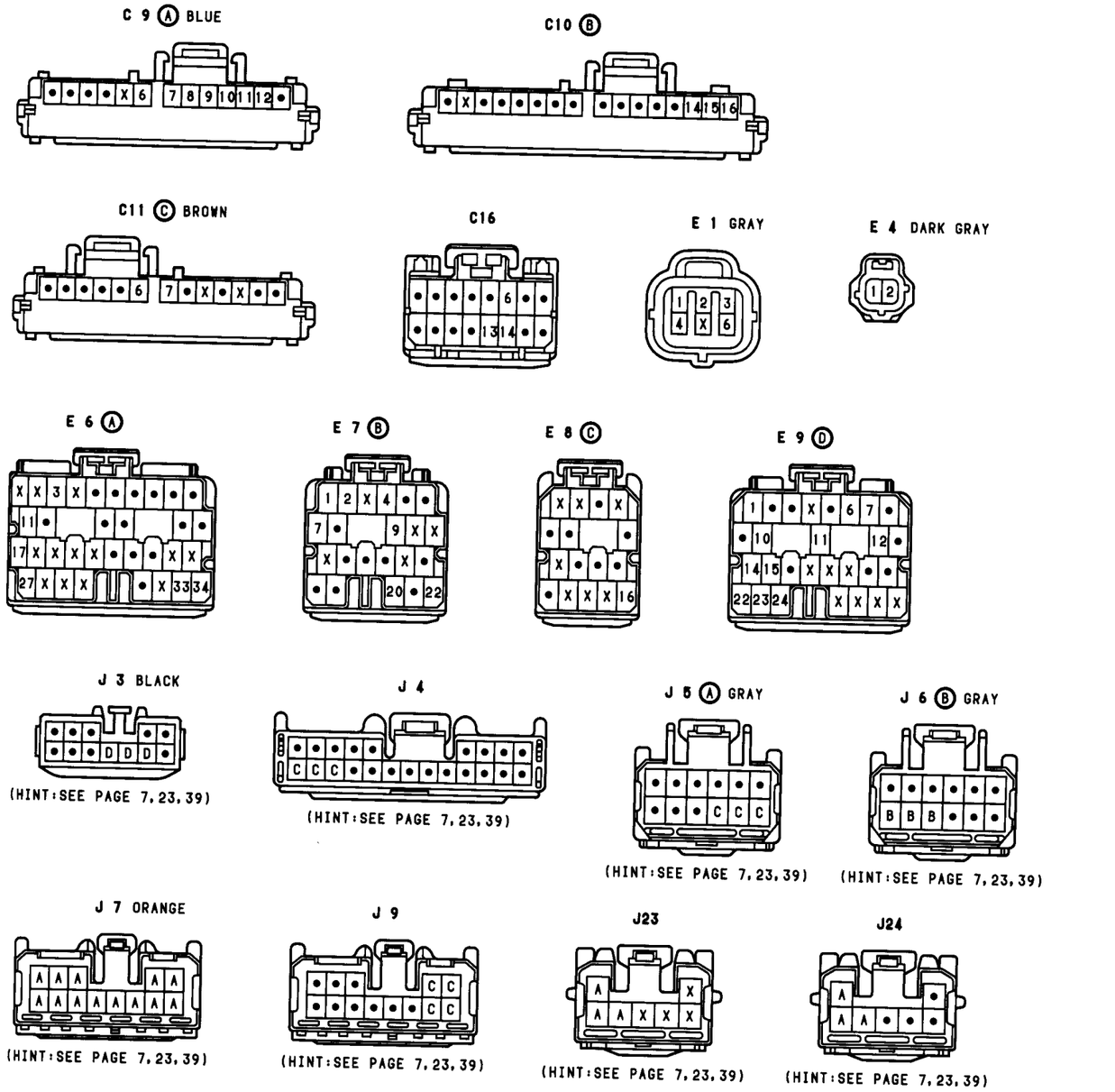

ECT AND A/T INDICATOR(1MZ-FE LHD)

J27

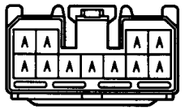

(HINT:SEE PAGE 7,23,39)

J28 (A)

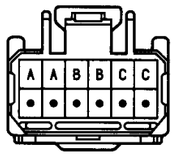

(HINT:SEE PAGE 7,23,39)

J29 (B)

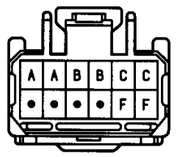

(HINT:SEE PAGE 7,23,39)

J40 GRAY

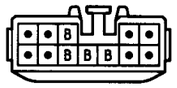

(HINT:SEE PAGE 7,23,39)

J41

(HINT:SEE PAGE 7,23,39)

K 4 BLACK

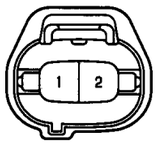

N 1 GRAY

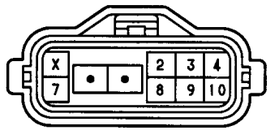

O 2 BLUE

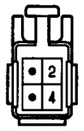

S 1 BLACK

S 2 BLACK

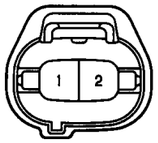

S 7 BLUE

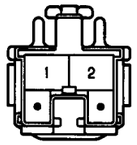

T 1 BLACK

ECT AND A/T INDICATOR(5S-FE LHD)

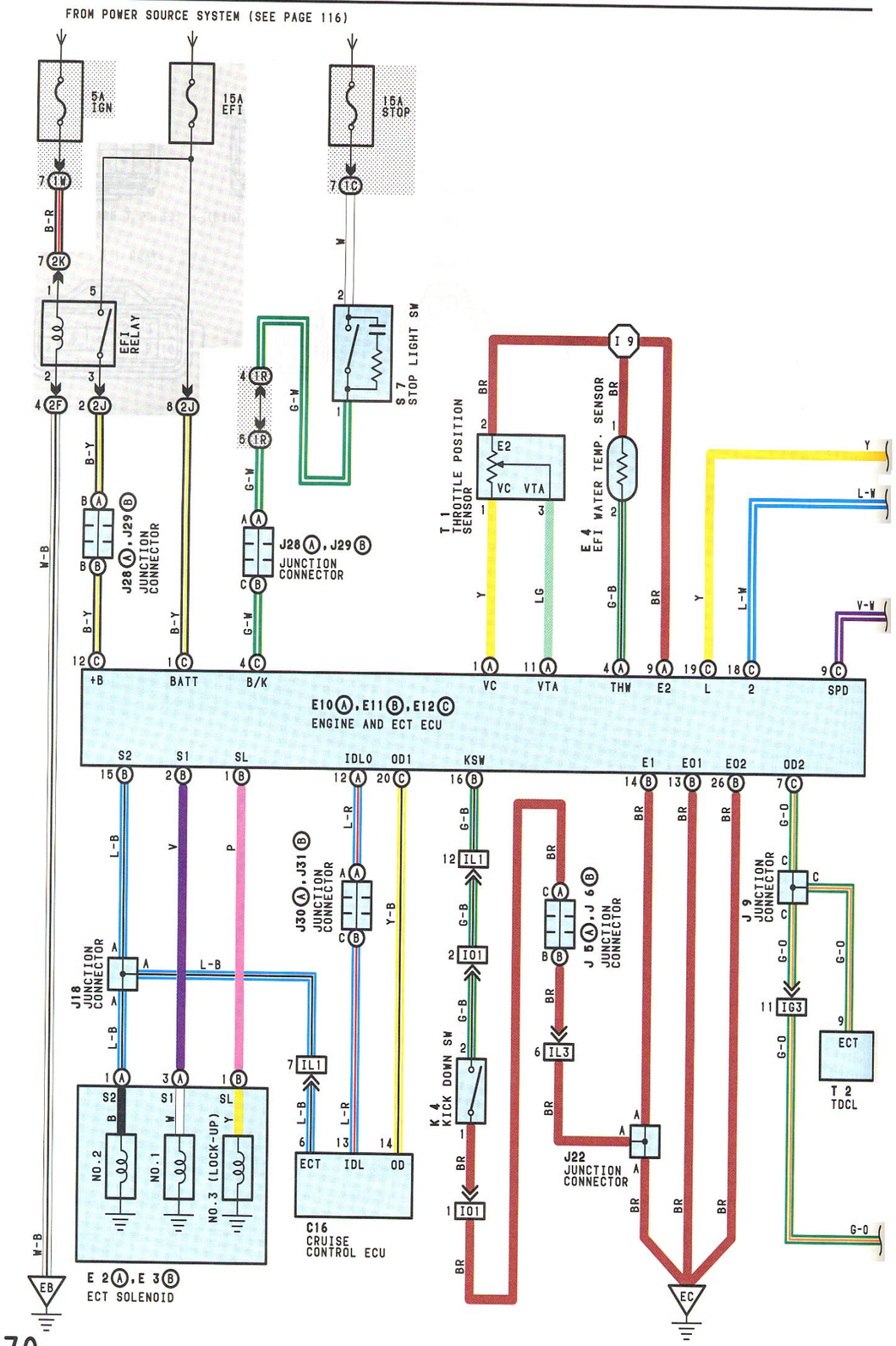

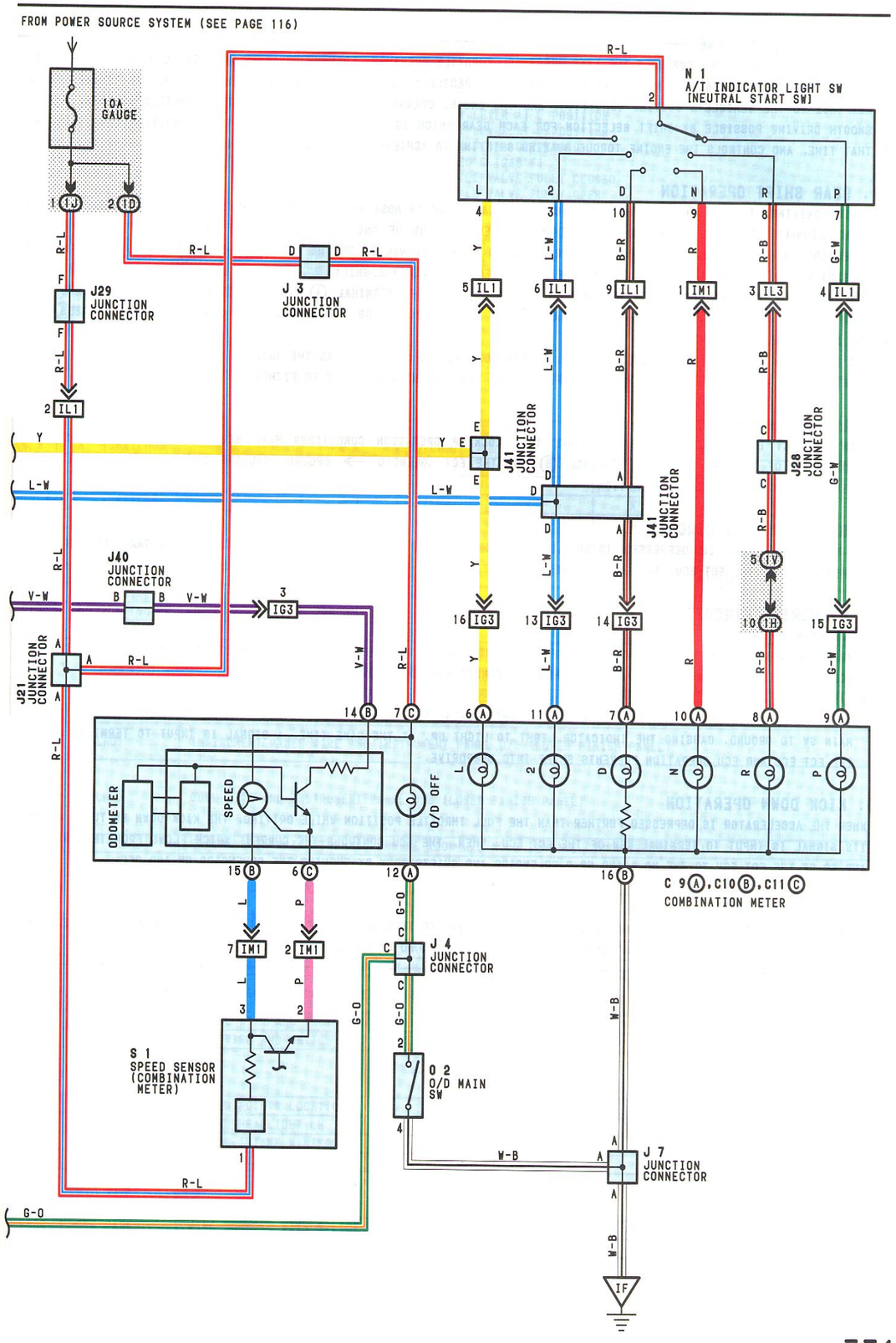

ECT AND A/T INDICATOR(5S-FE LHD)

SYSTEM OUTLINE

THIS SYSTEM ELECTRICALLY CONTROLS THE LINE PRESSURE, THROTTLE PRESSURE, LOCK-UP PRESSURE AND ACCUMULATOR PRESSURE ETC. THROUGH THE SOLENOID VALVE. THE ECT IS A SYSTEM WHICH PRECISELY CONTROLS GEAR SHIFT TIMING AND LOCK-UP TIMING IN THE RESPONSE TO THE VEHICLE'S DRIVING CONDITIONS AND THE ENGINE OPERATING CONDITIONS DETECTED BY VARIOUS SENSORS, MAKING SMOOTH DRIVING POSSIBLE BY SHIFT SELECTION FOR EACH GEAR WHICH IS THE MOST APPROPRIATE TO THE DRIVING CONDITIONS AT THAT TIME, AND CONTROLS THE ENGINE TORQUE DUARING SHIFTING TO ACHIEVE OPTIMUM SHIFT FEELING.

1. GEAR SHIFT OPERATION

DURING DRIVING, THE ECU SELECTS THE SHIFT FOR EACH GEAR WHICH IS MOST APPROPRIATE TO THE DRIVING CONDITIONS, BASED ON INPUT SIGNALS FROM THE EFI WATER TEMP. SENSOR TO **TERMINAL THW** OF THE ECT ECU. CURRENT IS THEN OUTPUT TO THE ECT SOLENOIDS. WHEN SHIFTING TO 1ST SPEED, CURRENT FLOWS FROM **TERMINAL S1** OF THE ECT ECU → **TERMINAL** Ⓐ**3** OF THE ECT SOLENOIDS → **GROUND**, AND CONTINUITY TO THE NO.1 SOLENOID CAUSES THE SHIFT.

FOR 2ND SPEED, CURRENT FLOWS FROM **TERMINAL S1** OF THE ECT ECU → **TERMINAL** Ⓐ**3** OF THE ECT SOLENOIDS → **GROUND**, AND FROM **TERMINAL S2** OF THE ECT ECU → **TERMINAL** Ⓐ**1** OF THE ECT SOLENOIDS → **GROUND**, AND CONTINUITY TO SOLENOIDS NO.1 AND NO.2 CAUSES THE SHIFT.

FOR 3RD SPEED, THERE IS NO CONTINUITY TO NO.1 SOLENOID, ONLY TO NO.2, CAUSING THE SHIFT.

SHIFTING INTO 4TH SPEED (OVER DRIVE) TAKES PLACE WHEN THERE IS NO CONTINUITY TO EITHER NO.1 OR NO.2 SOLENOID.

2. LOCK-UP OPERATION

WHEN THE ECT ECU JUDGES FROM EACH SIGNAL THAT LOCK-UP OPERATION CONDITIONS HAVE BEEN MET, CURRENT FLOWS FROM **TERMINAL SL** OF THE ECT ECU → **TERMINAL** Ⓑ**1** OF THE ECT SOLENOID → **GROUND**, CAUSING CONTINUITY TO THE LOCK-UP SOLENOID AND CAUSING LOCK-UP OPERATION.

3. STOP LIGHT SW CIRCUIT

IF THE BRAKE PEDAL IS DEPRESSED (STOP LIGHT SW ON) WHEN DRIVING IN LOCK-UP CONDITION, A SIGNAL IS INPUT TO **TERMINAL B/K** OF THE ECT ECU, THE ECU OPERATES AND CONTINUITY TO THE LOCK-UP SOLENOID IS CUT.

4. OVERDRIVE CIRCUIT

- O/D MAIN SW ON

  WHEN THE O/D MAIN SW IS TURNED ON (O/D OFF INDICATOR LIGHT TURNS OFF), A SIGNAL IS INPUT TO **TERMINAL OD2** OF THE ECT ECU AND ECU OPERATION CAUSES GEAR SHIFT WHEN THE CONDITIONS FOR OVERDRIVE ARE MET.
- O/D MAIN SW OFF

  WHEN THE O/D MAIN SW IS TURNED TO OFF, THE CURRENT FLOWING THROUGH THE O/D OFF INDICATOR LIGHT FLOWS THROUGH THE O/D MAIN SW TO GROUND. CAUSING THE INDICATOR LIGHT TO LIGHT UP. AT THE SAME TIME, A SIGNAL IS INPUT TO **TERMINAL OD2** OF THE ECT ECU AND ECU OPERATION PREVENTS SHIFT INTO OVERDRIVE.

5. KICK DOWN OPERATION

WHEN THE ACCELERATOR IS DEPRESSED FURTHER THAN THE FULL THROTTLE POSITION WHILE DRIVING, THE KICK DOWN SW TURNS ON AND ITS SIGNAL IS INPUT TO **TERMINAL KSW** OF THE ECT ECU. THEN, THE ECU CONTROLS THE CURRENT WHICH FLOWS FROM **TERMINALS S1** AND **S2** OF THE ECT ECU TO THE NO.1 AND NO.2 SOLENOIDS AND SHIFTS DOWN BY TURNING THE SOLENOIDS ON AND OFF.

6. CRUISE CONTROL

WHEN CRUISE CONTROL OPERATION IS SELECTED A SIGNAL IS INPUT TO **TERMINAL OD1** OF THE ECT ECU FROM CRUISE CONTROL ECU. AS A RESULT, THE ECU OPERATES AND CONTROLS OVERDRIVE, LOCK-UP AND SO ON FOR SMOOTH DRIVING.

SERVICE HINTS

E10Ⓐ,E11Ⓑ,E12Ⓒ ENGINE AND ECT ECU

S1,S2-E1:9.0-14.0 VOLTS WITH THE SOLENOID ON
0-1.5 VOLTS WITH THE SOLENOID OFF
L-E1:7.5-14.0 VOLTS WITH THE IGNITION SW ON AND THE SHIFT LEVER AT **L** POSITION
2-E1:7.5-14.0 VOLTS WITH THE IGNITION SW ON AND THE SHIFT LEVER AT **2** POSITION
B/K-E1:9.0-14.0 VOLTS WITH THE IGNITION SW ON AND THE BRAKE PEDAL DEPRESSED
THW-E1:0.2-1.0 VOLTS WITH THE COOLANT TEMP. **60°C (140°F)-120°C (248°F)**
VTA-E1:0.3-0.8 VOLTS WITH THE IGNITION SW ON AND THE THROTTLE VALVE FULLY CLOSED
3.2-4.9 VOLTS WITH THE IGNITION SW ON AND THE THROTTLE VALVE FULLY OPEN
VC-E2:4.5-5.5 VOLTS WITH THE IGNITION SW AT **ON** POSITION
OD1-E1:4.5-5.5 VOLTS WITH THE IGNITION SW AT **ON** POSITION
OD2-E1:9.0-14.0 VOLTS WITH THE IGNITION SW ON AND THE O/D MAIN SW TURNED OFF
0-3.0 VOLTS WITH THE IGNITION SW ON AND THE O/D MAIN SW TURNED ON
+B-E1:9.0-14.0 VOLTS WITH THE IGNITION SW AT **ON** POSITION

E 2Ⓐ,E 3Ⓑ ECT SOLENOID

Ⓐ1,Ⓐ3,Ⓑ1-GROUND:EACH 11-15 Ω

O 2 O/D MAIN SW

2-4:CLOSED WITH THE O/D MAIN SW OFF, OPEN WITH THE O/D MAIN SW ON

○ : PARTS LOCATION

CODE		SEE PAGE	CODE		SEE PAGE	CODE		SEE PAGE
C 9	A	64(LHD)	J 4		66(LHD)	J31	B	66(LHD)
C10	B	64(LHD)	J 5	A	66(LHD)	J40		66(LHD)
C11	C	64(LHD)	J 6	B	66(LHD)	J41		66(LHD)
C16		64(LHD)	J 7		66(LHD)	K 4		66(LHD)
E 2	A	62(5S-FE LHD)	J 9		66(LHD)	N 1		62(5S-FE LHD)
E 3	B	62(5S-FE LHD)	J18		66(LHD)	O 2		66(LHD)
E 4		62(5S-FE LHD)	J21		66(LHD)	S 1		62(5S-FE LHD)
E10	A	64(5S-FE LHD)	J22		66(LHD)	S 7		66(LHD)
E11	B	64(5S-FE LHD)	J28	A	66(LHD)	T 1		62(5S-FE LHD)
E12	C	64(5S-FE LHD)	J29	B	66(LHD)	T 2		66(LHD)
J 3		66(LHD)	J30	A	66(LHD)			

: JUNCTION BLOCK AND WIRE HARNESS CONNECTOR

CODE	SEE PAGE	JUNCTION BLOCK AND WIRE HARNESS (CONNECTOR LOCATION)
1C	52(LHD)	COWL WIRE AND INSTRUMENT PANEL J/B (LOWER FINISH PANEL)
1D	52(LHD)	INSTRUMENT PANEL WIRE AND INSTRUMENT PANEL J/B (LOWER FINISH PANEL)
1H		
1J	52(LHD)	COWL WIRE AND INSTRUMENT PANEL J/B (LOWER FINISH PANEL)
1R		
1V		
1W		
2F	56	ENGINE ROOM MAIN WIRE AND ENGINE ROOM J/B NO.2 (ENGINE COMPARTMENT LEFT)
2J	56	COWL WIRE AND ENGINE ROOM J/B NO.2 (ENGINE COMPARTMENT LEFT)
2K		

□ : CONNECTOR JOINING WIRE HARNESS AND WIRE HARNESS

CODE	SEE PAGE	JOINING WIRE HARNESS AND WIRE HARNESS (CONNECTOR LOCATION)
IG3	86(LHD)	INSTRUMENT PANEL WIRE AND COWL WIRE (UNDER THE BLOWER MOTOR)
IL1	88(LHD)	ENGINE WIRE AND COWL WIRE (UNDER THE BLOWER MOTOR)
IL3		
IM1	88(LHD)	ENGINE WIRE AND INSTRUMENT PANEL WIRE (UNDER THE BLOWER MOTOR)
IO1	88(LHD)	COWL WIRE AND SWITCH WIRE (INSTRUMENT PANEL BRACE LH)

▽ : GROUND POINTS

CODE	SEE PAGE	GROUND POINTS LOCATION
EB	84(5S-FE LHD)	BEHIND HEADLIGHT LH
EC	84(5S-FE LHD)	BEHIND INTAKE MANIFOLD
IF	86(LHD)	LEFT KICK PANEL

⬡ : SPLICE POINTS

CODE	SEE PAGE	WIRE HARNESS WITH SPLICE POINTS	CODE	SEE PAGE	WIRE HARNESS WITH SPLICE POINTS
I 9	88(LHD)	ENGINE WIRE			

ECT AND A/T INDICATOR(5S-FE LHD)

C 9 Ⓐ BLUE

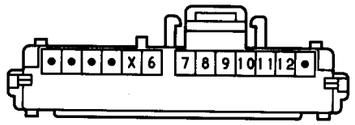

C10 Ⓑ

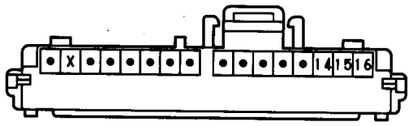

C11 Ⓒ BROWN

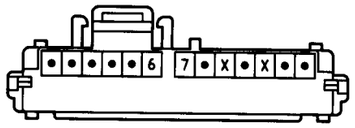

C16

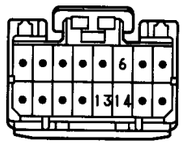

E 2 Ⓐ BLACK

E 3 Ⓑ BLACK

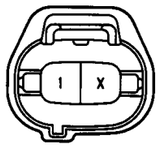

E 4 GREEN

E10 Ⓐ

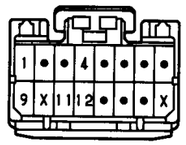

E11 Ⓑ

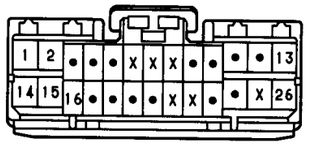

E12 Ⓒ

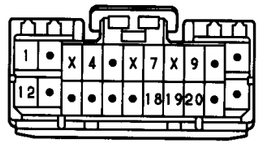

J 3 BLACK

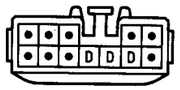

(HINT:SEE PAGE 7,23,39)

J 4

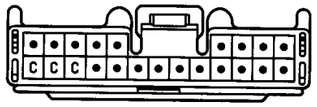

(HINT:SEE PAGE 7,23,39)

J 5 Ⓐ GRAY

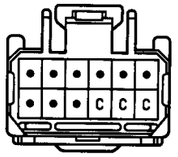

(HINT:SEE PAGE 7,23,39)

J 6 Ⓑ GRAY

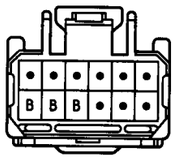

(HINT:SEE PAGE 7,23,39)

J 7 ORANGE

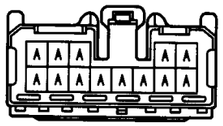

(HINT:SEE PAGE 7,23,39)

J 9

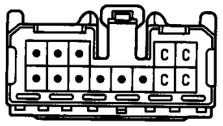

(HINT:SEE PAGE 7,23,39)

J18

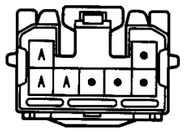

(HINT:SEE PAGE 7,23,39)

J21 GRAY

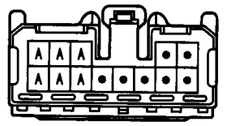

(HINT:SEE PAGE 7,23,39)

J22

(HINT:SEE PAGE 7,23,39)

J28 Ⓐ

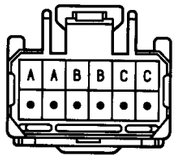

(HINT:SEE PAGE 7,23,39)

J29 Ⓑ

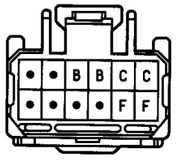

(HINT:SEE PAGE 7,23,39)

J30 Ⓐ

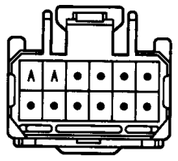

(HINT:SEE PAGE 7,23,39)

J31 Ⓑ

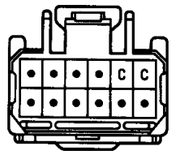

(HINT:SEE PAGE 7,23,39)

J40 GRAY

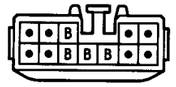

(HINT:SEE PAGE 7,23,39)

J41

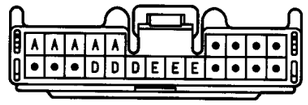

(HINT:SEE PAGE 7,23,39)

K 4 BLACK

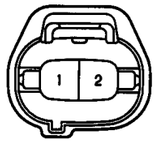

N 1 GRAY

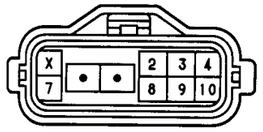

O 2 BLUE

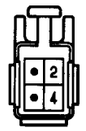

S 1 BLACK

S 7 BLUE

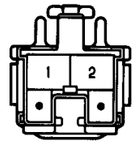

T 1 BLACK

T 2 DARK GRAY

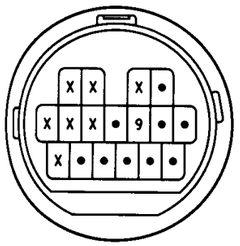

ABS(LHD)

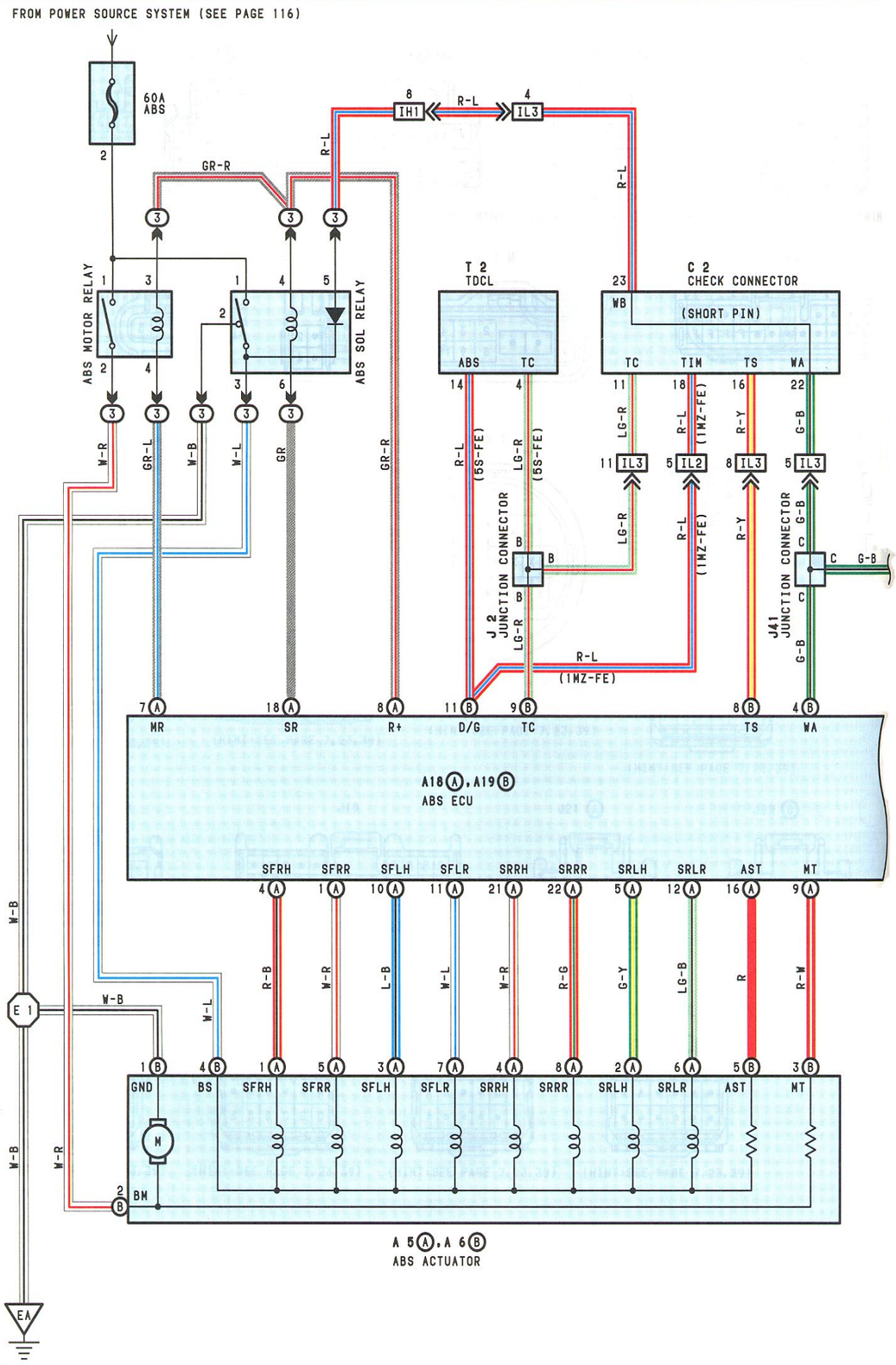
FROM POWER SOURCE SYSTEM (SEE PAGE 116)
60A ABS
ABS MOTOR RELAY
ABS SOL RELAY
T 2 TDCL
C 2 CHECK CONNECTOR
(SHORT PIN)
J 2 JUNCTION CONNECTOR
J41 JUNCTION CONNECTOR
A18 A, A19 B ABS ECU
A 5 A, A 6 B ABS ACTUATOR
MR SR R+ D/G TC TS WA
SFRH SFRR SFLH SFLR SRRH SRRR SRLH SRLR AST MT
GND BS BM
E 1
EA

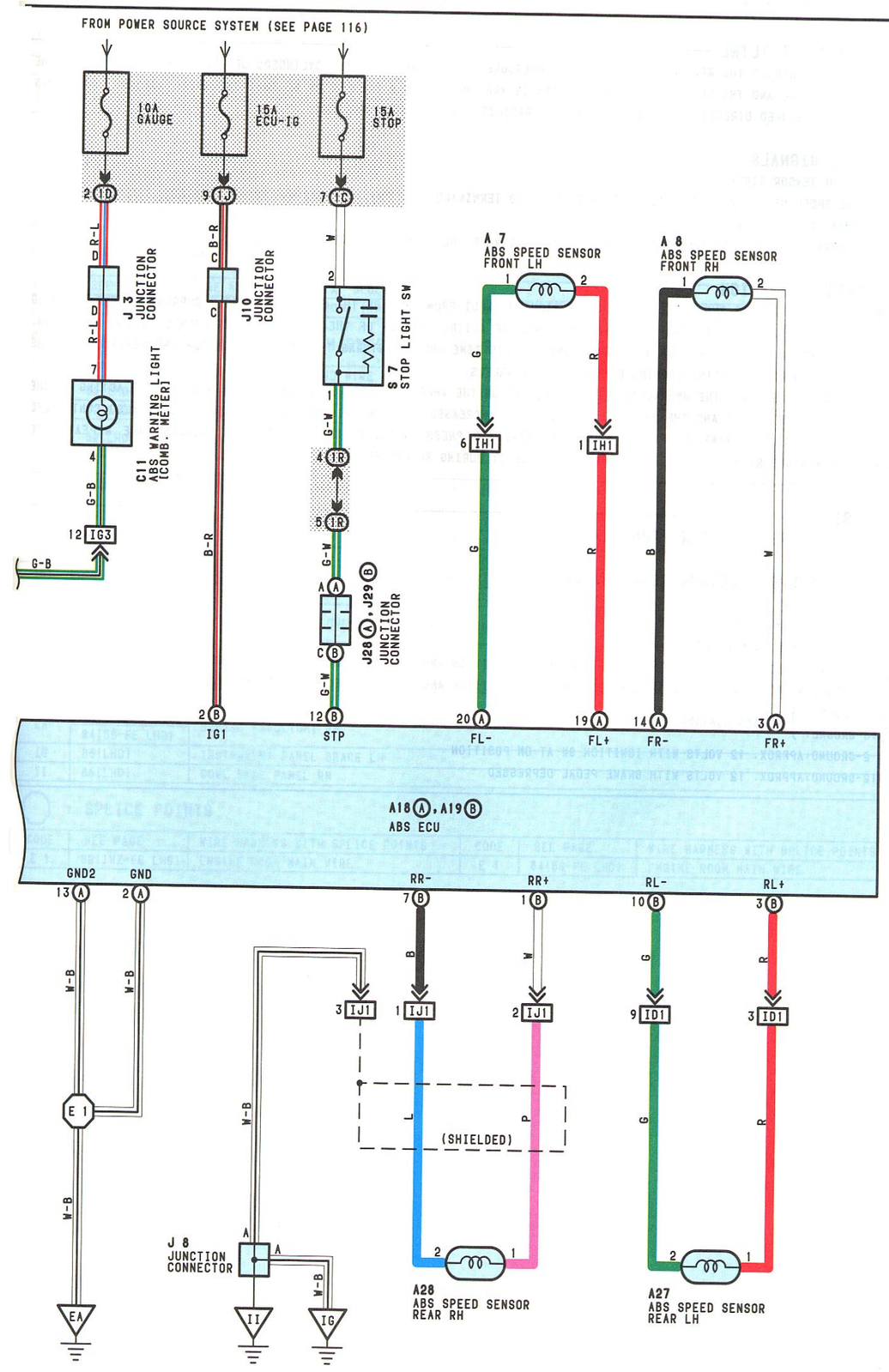
FROM POWER SOURCE SYSTEM (SEE PAGE 116)
10A GAUGE
15A ECU-IG
15A STOP
J 3 JUNCTION CONNECTOR
J10 JUNCTION CONNECTOR
C11 ABS WARNING LIGHT (COMB. METER)
S 7 STOP LIGHT SW
A 7 ABS SPEED SENSOR FRONT LH
A 8 ABS SPEED SENSOR FRONT RH
J28 A, J29 B JUNCTION CONNECTOR
IG1 STP FL- FL+ FR- FR+
A18 A, A19 B ABS ECU
GND2 GND RR- RR+ RL- RL+
(SHIELDED)
J 8 JUNCTION CONNECTOR
A28 ABS SPEED SENSOR REAR RH
A27 ABS SPEED SENSOR REAR LH
E 1
EA

ABS(LHD)

SYSTEM OUTLINE

THIS SYSTEM CONTROLS THE RESPECTIVE BRAKE FLUID PRESSURES ACTING ON THE BRAKE CYLINDERS OF THE RIGHT FRONT WHEEL, THE LEFT FRONT WHEEL AND THE REAR WHEELS WHEN THE BRAKES ARE APPLIED IN A PANIC STOP SO THAT THE WHEELS DO NOT LOCK. THIS RESULTS IN IMPROVED DIRECTIONAL STABILITY AND STEERABILITY DURING PANIC BRAKING.

1. INPUT SIGNALS

(1) SPEED SENSOR SIGNAL

THE SPEED OF THE WHEELS IS DETECTED AND INPUT TO **TERMINALS FL+, FR+, RL+** AND **RR+** OF THE ABS ECU.

(2) STOP LIGHT SW SIGNAL

A SIGNAL IS INPUT TO **TERMINAL STP** OF THE ABS ECU WHEN THE BRAKE PEDAL DEPRESSED.

2. SYSTEM OPERATION

DURING SUDDEN BRAKING THE ABS ECU WHICH HAS SIGNALS INPUT FROM EACH OF THE SENSOR, CONTROLS CURRENT TO THE SOLENOID INSIDE THE ACTUATOR AND CAUSES THE HYDRAULIC PRESSURE ACTING ON EACH OF THE WHEEL CYLINDER ESCAPE TO THE RESERVOIR. THE PUMP INSIDE THE ACTUATOR IS ALSO OPERATING AT THIS TIME AND IT RETURNS THE BRAKE FLUID FROM THE RESERVOIR TO THE MASTER CYLINDER, PREVENTING LOCKING OF THE VEHICLE WHEELS.

IF THE ECU JUDGES THAT THE HYDRAULIC PRESSURE ACTING ON THE WHEEL CYLINDER IS INSUFFICIENT, THE CURRENT ACTING ON THE SOLENOID IS CONTROLLED AND THE HYDRAULIC PRESSURE IS INCREASED. HOLDING OF THE HYDRAULIC PRESSURE IS ALSO CONTROLLED BY THE ECU, BY THE SAME METHOD AS ABOVE. BY REPEATED PRESSURE REDUCTION, HOLDING AND INCREASE ARE REPEATED TO MAINTAIN VEHICLE STABILITY AND TO IMPROVE STEERABILITY DURING SUDDEN BRAKING.

SERVICE HINTS

A 7, A 8 ABS SPEED SENSOR FRONT LH, RH

1-2:1.6 -1.8 KΩ

A27, A28 ABS SPEED SENSOR REAR LH, RH

1-2:1.8 -2.0 KΩ

A18Ⓐ, A19Ⓑ ABS ECU

(CONNECT THE ECU CONNECTORS)

Ⓑ 9-GROUND:APPROX. 12 VOLTS WITH IGNITION SW AT **ON** POSITION AND CHECK CONNECTOR TC-E1 NOT CONNECTED

Ⓑ 8-GROUND:APPROX. 12 VOLTS WITH IGNITION SW AT **ON** POSITION AND CHECK CONNECTOR TS-E1 NOT CONNECTED

Ⓐ 2-GROUND: } ALWAYS CONTINUITY

Ⓐ 13-GROUND: } ALWAYS CONTINUITY

Ⓑ 2-GROUND:APPROX. 12 VOLTS WITH IGNITION SW AT **ON** POSITION

Ⓑ 12-GROUND:APPROX. 12 VOLTS WITH BRAKE PEDAL DEPRESSED

○ : PARTS LOCATION

CODE		SEE PAGE	CODE		SEE PAGE	CODE		SEE PAGE
A 5	A	60(1MZ-FE LHD)	A18	A	64(LHD)	J 3		66(LHD)
		62(5S-FE LHD)	A19	B	64(LHD)	J 8		66(LHD)
A 6	B	60(1MZ-FE LHD)	A27		68(LHD)	J10		66(LHD)
		62(5S-FE LHD)	A28		68(LHD)	J28	A	66(LHD)
A 7		60(1MZ-FE LHD)	C 2		60(1MZ-FE LHD)	J29	B	66(LHD)
		62(5S-FE LHD)			62(5S-FE LHD)	J41		66(LHD)
A 8		60(1MZ-FE LHD)	C11		64(LHD)	S 7		66(LHD)
		62(5S-FE LHD)	J 2		66(LHD)	T 2		66(LHD)

○ : RELAY BLOCKS

CODE	SEE PAGE	RELAY BLOCKS (RELAY BLOCK LOCATION)
3	59	ENGINE ROOM R/B NO.3 (RADIATOR UPPER SUPPORT LH)

◎ : JUNCTION BLOCK AND WIRE HARNESS CONNECTOR

CODE	SEE PAGE	JUNCTION BLOCK AND WIRE HARNESS (CONNECTOR LOCATION)
1C	52(LHD)	COWL WIRE AND INSTRUMENT PANEL J/B (LOWER FINISH PANEL)
1D	52(LHD)	INSTRUMENT PANEL WIRE AND INSTRUMENT PANEL J/B (LOWER FINISH PANEL)
1J	52(LHD)	COWL WIRE AND INSTRUMENT PANEL J/B (LOWER FINISH PANEL)
1R		

□ : CONNECTOR JOINING WIRE HARNESS AND WIRE HARNESS

CODE	SEE PAGE	JOINING WIRE HARNESS AND WIRE HARNESS (CONNECTOR LOCATION)
ID1	86(LHD)	FLOOR WIRE AND COWL WIRE (LEFT KICK PANEL)
IG3	86(LHD)	INSTRUMENT PANEL WIRE AND COWL WIRE (UNDER THE BLOWER MOTOR)
IH1	86(LHD)	ENGINE ROOM MAIN WIRE AND COWL WIRE (RIGHT KICK PANEL)
IJ1	88(LHD)	FLOOR NO.2 WIRE AND COWL WIRE (RIGHT KICK PANEL)
IL2	88(1MZ-FE LHD)	ENGINE WIRE AND COWL WIRE (UNDER THE BLOWER MOTOR)
IL3	88(LHD)	

▽ : GROUND POINTS

CODE	SEE PAGE	GROUND POINTS LOCATION
EA	82(1MZ-FE LHD)	BEHIND HEADLIGHT RH
	84(5S-FE LHD)	
IG	86(LHD)	INSTRUMENT PANEL BRACE LH
II	86(LHD)	COWL SIDE PANEL RH

⬡ : SPLICE POINTS

CODE	SEE PAGE	WIRE HARNESS WITH SPLICE POINTS	CODE	SEE PAGE	WIRE HARNESS WITH SPLICE POINTS
E 1	82(1MZ-FE LHD)	ENGINE ROOM MAIN WIRE	E 1	84(5S-FE LHD)	ENGINE ROOM MAIN WIRE

ABS(LHD)

A 5 Ⓐ BLACK

A 6 Ⓑ GRAY

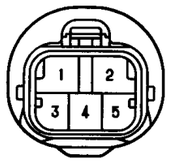

A 7 GRAY

A 8

A18 Ⓐ

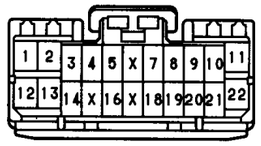

A19 Ⓑ

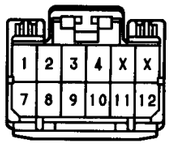

A27

A28 GRAY

(1MZ-FE) C 2 BLACK

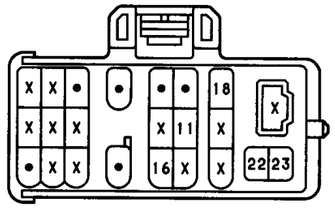

(5S-FE) C 2 BLACK

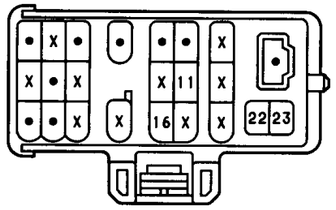

C11 BROWN

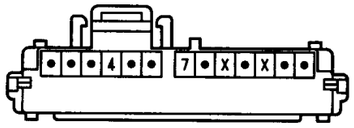

J 2 GRAY

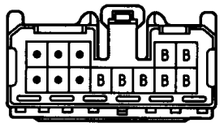

(HINT:SEE PAGE 7,23,39)

J 3 BLACK

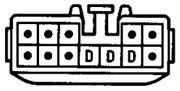

(HINT:SEE PAGE 7,23,39)

J 8

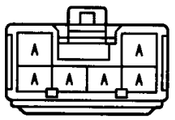

(HINT:SEE PAGE 7,23,39)

J10 BLACK

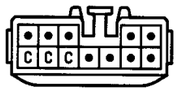

(HINT:SEE PAGE 7,23,39)

J28 Ⓐ

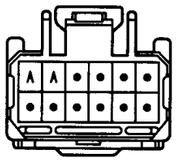

(HINT:SEE PAGE 7,23,39)

J29 Ⓑ

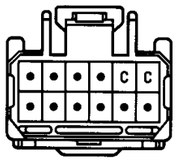

(HINT:SEE PAGE 7,23,39)

J41

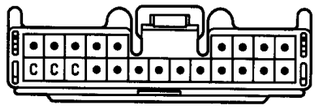

(HINT:SEE PAGE 7,23,39)

S 7 BLUE

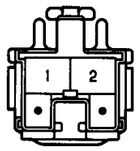

(5S-FE) T 2 DARK GRAY

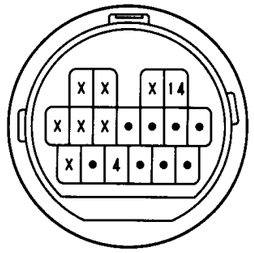

REAR WINDOW DEFOGGER AND MIRROR HEATER(LHD)

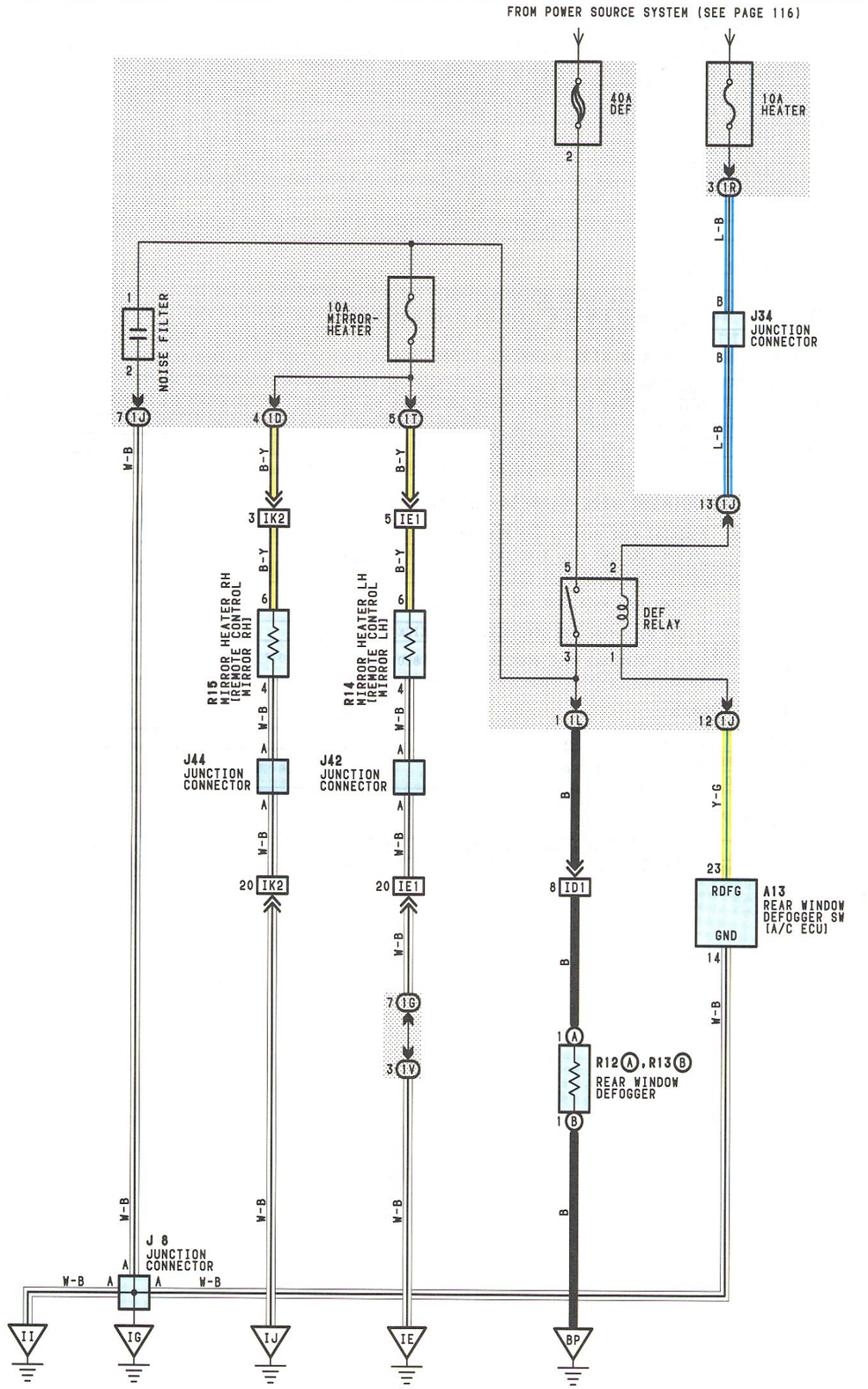

SERVICE HINTS

DEF RELAY

5-3:CLOSED WITH THE IGNITION SW AT ON POSITION AND REAR WINDOW DEFOGGER SW [A/C ECU] ON

○ : PARTS LOCATION

CODE	SEE PAGE	CODE	SEE PAGE	CODE	SEE PAGE
A13	64(LHD)	J42	68(LHD)	R13 B	68(LHD)
J 8	66(LHD)	J44	68(LHD)	R14	68(LHD)
J34	66(LHD)	R12 A	68(LHD)	R15	68(LHD)

⬭ : JUNCTION BLOCK AND WIRE HARNESS CONNECTOR

CODE	SEE PAGE	JUNCTION BLOCK AND WIRE HARNESS (CONNECTOR LOCATION)
1D	52(LHD)	INSTRUMENT PANEL WIRE AND INSTRUMENT PANEL J/B (LOWER FINISH PANEL)
1G		
1J	52(LHD)	COWL WIRE AND INSTRUMENT PANEL J/B (LOWER FINISH PANEL)
1L		
1R		
1T	52(LHD)	INSTRUMENT PANEL WIRE AND INSTRUMENT PANEL J/B (LOWER FINISH PANEL)
1V	52(LHD)	COWL WIRE AND INSTRUMENT PANEL J/B (LOWER FINISH PANEL)

▭ : CONNECTOR JOINING WIRE HARNESS AND WIRE HARNESS

CODE	SEE PAGE	JOINING WIRE HARNESS AND WIRE HARNESS (CONNECTOR LOCATION)
ID1	86(LHD)	FLOOR WIRE AND COWL WIRE (LEFT KICK PANEL)
IE1	86(LHD)	FRONT DOOR LH WIRE AND INSTRUMENT PANEL WIRE (LEFT KICK PANEL)
IK2	88(LHD)	FRONT DOOR RH WIRE AND INSTRUMENT PANEL WIRE (RIGHT KICK PANEL)

▽ : GROUND POINTS

CODE	SEE PAGE	GROUND POINTS LOCATION
IE	86(LHD)	COWL SIDE PANEL LH
IG	86(LHD)	INSTRUMENT PANEL BRACE LH
II	86(LHD)	COWL SIDE PANEL RH
IJ	86(LHD)	RIGHT KICK PANEL
BP	90(LHD)	RIGHT QUARTER PILLAR

A13

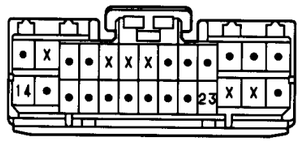

J 8

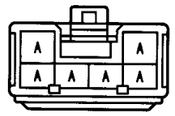

(HINT:SEE PAGE 7,23,39)

J34

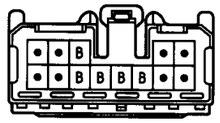

(HINT:SEE PAGE 7,23,39)

J42

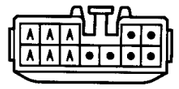

(HINT:SEE PAGE 7,23,39)

J44

(HINT:SEE PAGE 7,23,39)

R12 (A) BLACK

R13 (B) BLACK

R14

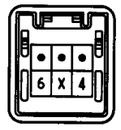

R15

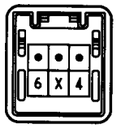

COMBINATION METER(LHD)

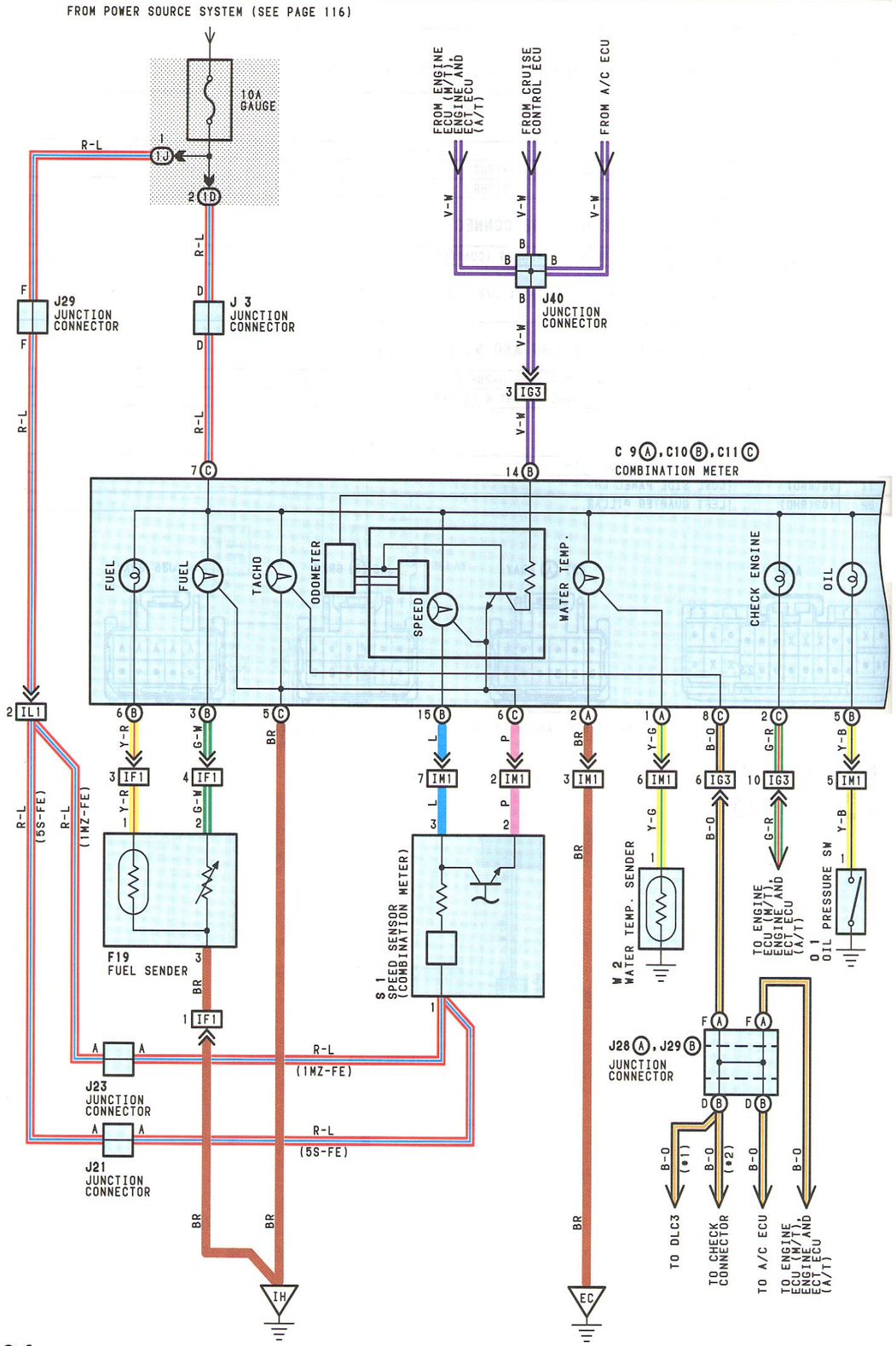

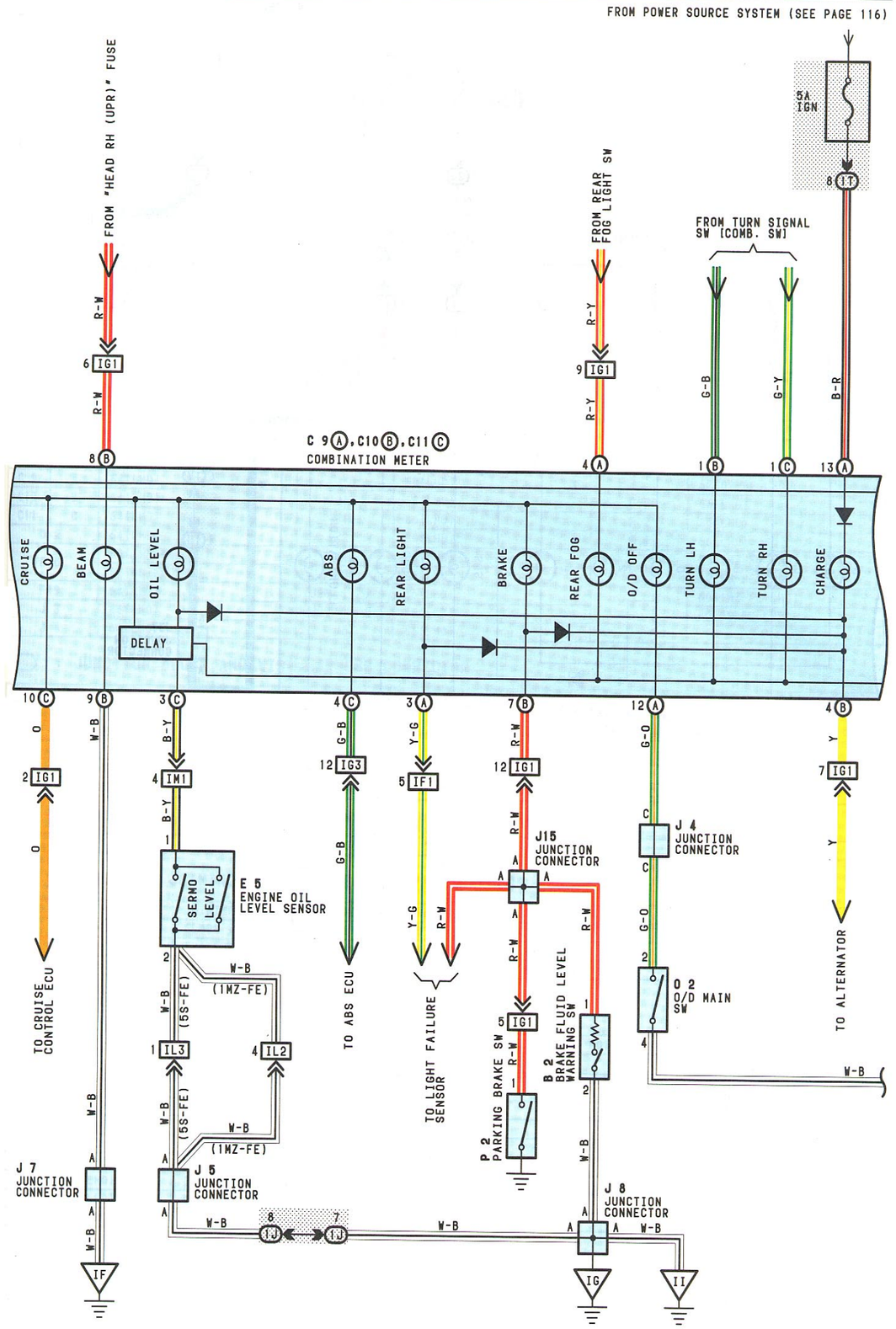

COMBINATION METER(LHD)

* 1:W/ DAYTIME RUNNING LIGHT
* 2:W/O DAYTIME RUNNING LIGHT

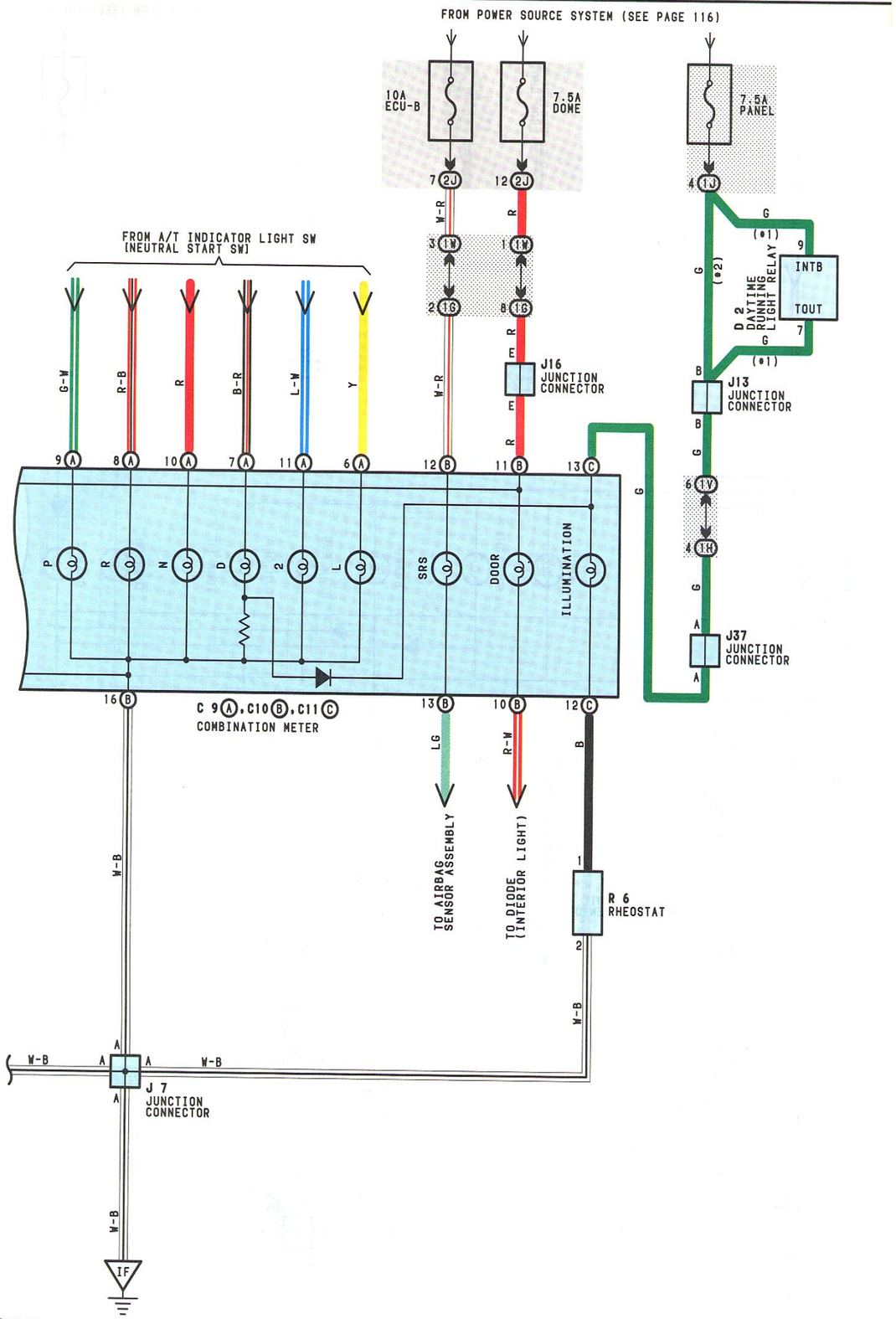

SERVICE HINTS

B 2 BRAKE FLUID LEVEL WARNING SW

1-2:CLOSED WITH THE FLOAT DOWN

C 9 Ⓐ, C10 Ⓑ, C11 Ⓒ COMBINATION METER

Ⓐ13, Ⓒ 7-GROUND:APPROX. 12 VOLTS WITH THE IGNITION SW AT ON POSITION

Ⓑ11, Ⓑ12-GROUND:ALWAYS APPROX. 12 VOLTS

Ⓐ2, Ⓑ16, Ⓒ 5-GROUND:ALWAYS CONTINUITY

F19 FUEL SENDER

1-2:APPROX. 3 Ω AT FUEL FULL
APPROX. 110 Ω AT FUEL EMPTY

O 1 OIL PRESSURE SW

1-GROUND:OPENED WITH THE OIL PRESSURE ABOVE APPROX. 20 KPA (2.8 PSI, 0.2 KG/CM²)

P 2 PARKING BRAKE SW

1-GROUND:CLOSED WITH THE PARKING BRAKE PEDAL DEPRESSED

W 2 WATER TEMP. SENDER

1-GROUND:APPROX. 160-240 Ω (50°C, 122°F)
APPROX. 17.1-20.4 Ω (120°C, 288°F)

○ : PARTS LOCATION

CODE		SEE PAGE	CODE		SEE PAGE	CODE	SEE PAGE
B 2		60(1MZ-FE LHD)	J 5		66(LHD)	J40	66(LHD)
		62(5S-FE LHD)	J 7		66(LHD)	O 1	60(1MZ-FE LHD)
C 9	A	64(LHD)	J 8		66(LHD)		62(5S-FE LHD)
C10	B	64(LHD)	J13		66(LHD)	O 2	66(LHD)
C11	C	64(LHD)	J15		66(LHD)	P 2	66(LHD)
D 2		64(LHD)	J21		66(LHD)	R 6	66(LHD)
E 5		60(1MZ-FE LHD)	J18		66(LHD)	S 1	60(1MZ-FE LHD)
		62(5S-FE LHD)	J23		66(LHD)		62(5S-FE LHD)
F19		68(LHD)	J26	A	66(LHD)	W 2	60(1MZ-FE LHD)
J 3		66(LHD)	J29	B	66(LHD)		62(5S-FE LHD)
J 4		66(LHD)	J37		66(LHD)		

: JUNCTION BLOCK AND WIRE HARNESS CONNECTOR

CODE	SEE PAGE	JUNCTION BLOCK AND WIRE HARNESS (CONNECTOR LOCATION)
1D	52(LHD)	INSTRUMENT PANEL WIRE AND INSTRUMENT PANEL J/B (LOWER FINISH PANEL)
1G		
1H		
1J	52(LHD)	COWL WIRE AND INSTRUMENT PANEL J/B (LOWER FINISH PANEL)
1T	52(LHD)	INSTRUMENT PANEL WIRE AND INSTRUMENT PANEL J/B (LOWER FINISH PANEL)
1V	52(LHD)	COWL WIRE AND INSTRUMENT PANEL J/B (LOWER FINISH PANEL)
1W		
2J	56	COWL WIRE AND ENGINE ROOM J/B NO.2 (ENGINE COMPARTMENT LEFT)

□ : CONNECTOR JOINING WIRE HARNESS AND WIRE HARNESS

CODE	SEE PAGE	JOINING WIRE HARNESS AND WIRE HARNESS (CONNECTOR LOCATION)
IF1	86(LHD)	FLOOR WIRE AND INSTRUMENT PANEL WIRE (LEFT KICK PANEL)
IG1	86(LHD)	INSTRUMENT PANEL WIRE AND COWL WIRE (LOWER FINISH PANEL)
IG3	86(LHD)	INSTRUMENT PANEL WIRE AND COWL WIRE (UNDER THE BLOWER MOTOR)
IL1	88(LHD)	ENGINE WIRE AND COWL WIRE (UNDER THE BLOWER MOTOR)
IL2	88(1MZ-FE LHD)	
IL3	88(LHD)	
IM1	88(LHD)	ENGINE WIRE AND INSTRUMENT PANEL WIRE (UNDER THE BLOWER MOTOR)

▽ : GROUND POINTS

CODE	SEE PAGE	GROUND POINTS LOCATION
EC	82(1MZ-FE LHD)	REAR SIDE OF THE SURGE TANK
	84(5S-FE LHD)	BEHIND INTAKE MANIFOLD
IF	86(LHD)	LEFT KICK PANEL
IG	86(LHD)	INSTRUMENT PANEL BRACE LH
IH	86(LHD)	INSTRUMENT PANEL BRACE RH
II	86(LHD)	COWL SIDE PANEL RH

COMBINATION METER(LHD)

B 2 GRAY

C 9 Ⓐ BLUE

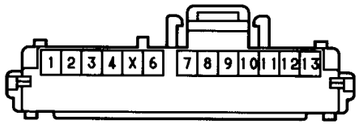

C10 Ⓑ

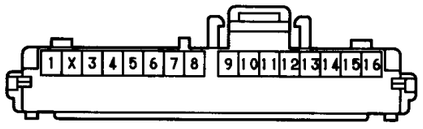

C11 Ⓒ BROWN

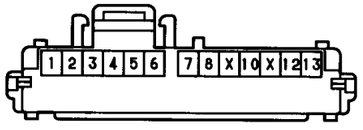

D 2 BLUE

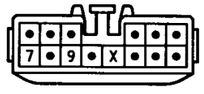

(1MZ-FE) E 5 GRAY

(5S-FE) E 5 GRAY

F19

J 3 BLACK

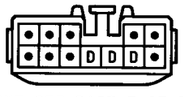

(HINT:SEE PAGE 7,23,39)

J 4

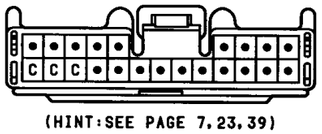

(HINT:SEE PAGE 7,23,39)

J 5 GRAY

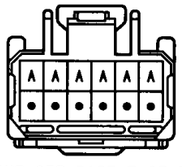

(HINT:SEE PAGE 7,23,39)

J 7 ORANGE

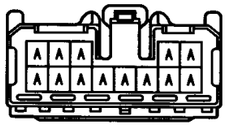

(HINT:SEE PAGE 7,23,39)

J 8

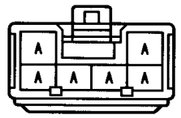

(HINT:SEE PAGE 7,23,39)

J13 BLUE

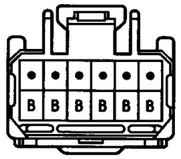

(HINT:SEE PAGE 7,23,39)

J15

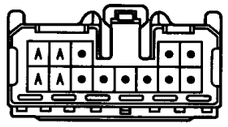

(HINT:SEE PAGE 7,23,39)

J16 BLACK

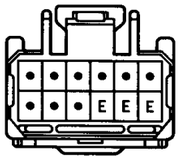

(HINT:SEE PAGE 7,23,39)

(5S-FE) J21 GRAY

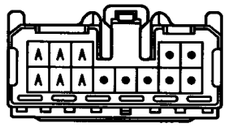

(HINT:SEE PAGE 7,23,39)

(1MZ-FE) J23

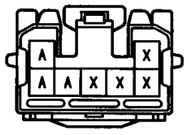

(HINT:SEE PAGE 7,23,39)

J28 Ⓐ

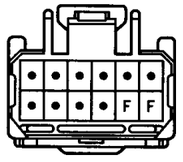

(HINT:SEE PAGE 7,23,39)

J29 Ⓑ

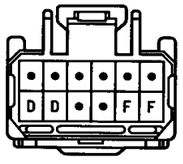

(HINT:SEE PAGE 7,23,39)

J37 GRAY

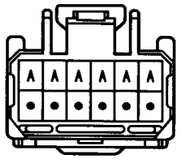

(HINT:SEE PAGE 7,23,39)

J40 GRAY

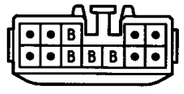

(HINT:SEE PAGE 7,23,39)

O 1 GRAY

O 2 BLUE

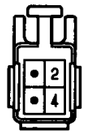

P 2

R 6

S 1 BLACK

W 2 GRAY

RADIATOR FAN AND CONDENSER FAN(LHD)

* 1:1MZ-FE
* 2:5S-FE

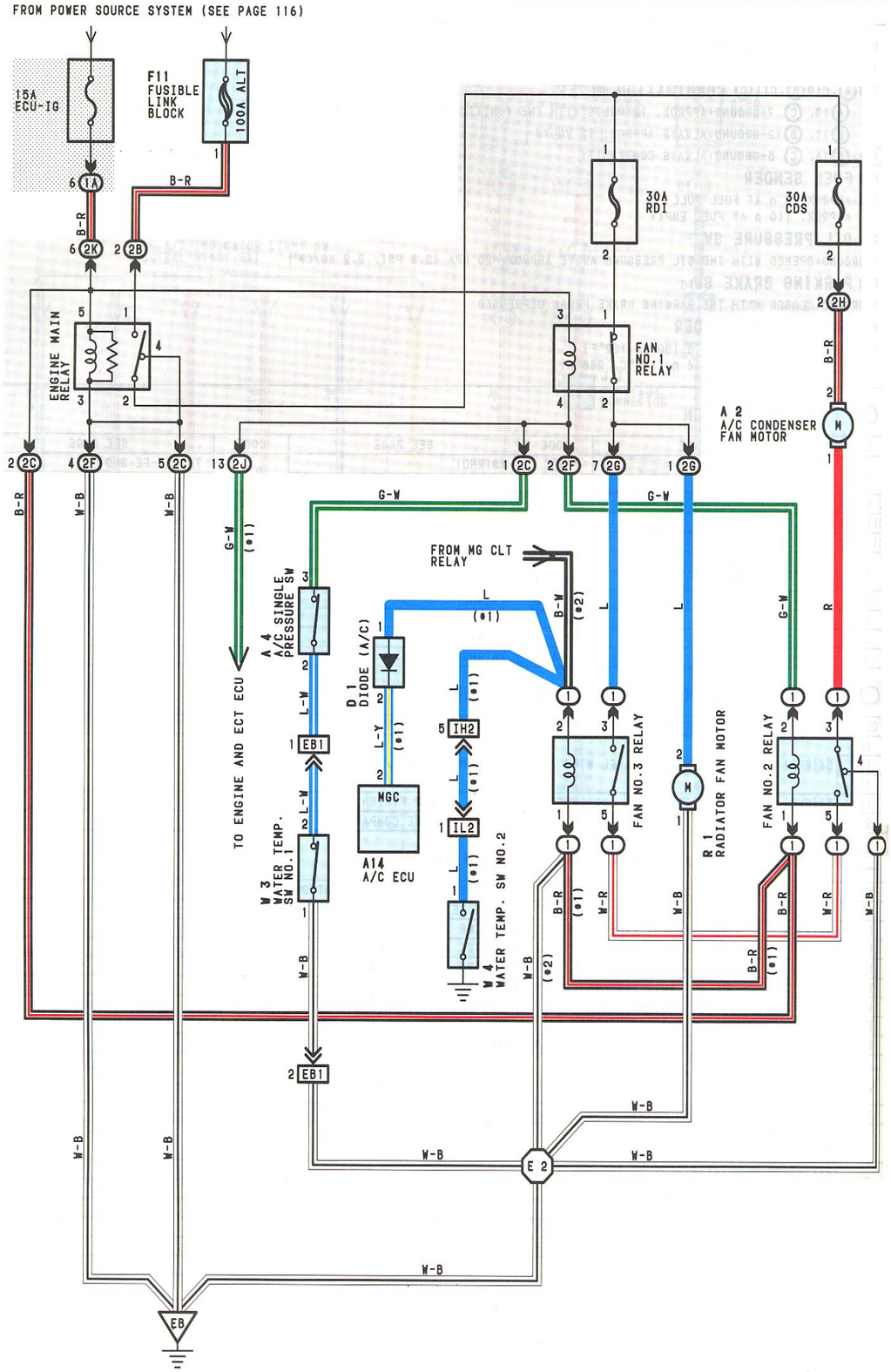

SYSTEM OUTLINE

FAN MOTOR OPERATION (1MZ-FE)

WITH THE IGNITION SW TURNED ON, THE CURRENT THROUGH THE **ECU-IG** FUSE FLOWS TO THE FAN NO.1 RELAY (COIL SIDE), FAN NO.2 RELAY (COIL SIDE) AND FAN NO.3 RELAY (COIL SIDE). FURTHERMORE, THE CURRENT THROUGH THE FAN NO.1 RELAY (COIL SIDE) OR THE FAN NO.2 RELAY (COIL SIDE) FLOWS TO **TERMINAL 3** OF THE A/C SINGLE PRESSURE SW → **TERMINAL 2** → **TERMINAL 2** OF THE WATER TEMP. SW NO.1 → **TERMINAL 1** → **GROUND**, CAUSING THE FAN NO.1 RELAY TO TURN OFF AND THE FAN NO.2 RELAY TO TURN ON.

1. LOW SPEED OPERATION

ONLY WHEN THE A/C SYSTEM IS ACTIVATED OR THE WATER TEMP. SW NO.2 IS TURNED ON, THE A/C CONDENSER FAN MOTOR AND THE RADIATOR FAN MOTOR ROTATES AT LOW SPEED.

WHEN THE A/C SYSTEM IS ACTIVATED, THE CURRENT FROM **ECU-IG** FUSE FLOWS TO THE FAN NO.3 RELAY (COIL SIDE) → **TERMINAL 1** OF THE DIODE (A/C) → **TERMINAL 2** → **TERMINAL 2** OF THE A/C ECU, CAUSING THE FAN NO.3 RELAY TO TURN ON. AS A RESULT, THE CURRENT THROUGH THE **CDS** FUSE FLOWS TO **TERMINAL 2** OF THE A/C CONDENSER FAN MOTOR → **TERMINAL 1** → **TERMINAL 3** OF THE FAN NO.2 RELAY → **TERMINAL 5** → **TERMINAL 5** OF THE FAN NO.3 RELAY → **TERMINAL 3** → **TERMINAL 2** OF THE RADIATOR FAN MOTOR → **TERMINAL 1** → **GROUND**. AS THIS FLOWING IN SERIES FOR THE MOTORS, THE MOTORS ROTATE AT LOW SPEED.

WHEN THE WATER TEMP. SW NO.2 IS TURNED ON, THE CURRENT FROM **ECU-IG** FUSE FLOWS TO THE FAN NO.3 RELAY (COIL SIDE) → **TERMINAL 1** OF THE WATER TEMP. SW NO.2 → **GROUND**, CAUSING THE FAN NO.3 RELAY TO TURN ON. AS A RESULT, THE CURRENT THROUGH THE **CDS** FUSE FLOWS THE SAME ROUTE AS ABOVE, ROTATING THE MOTORS AT LOW SPEED.

2. HIGH SPEED OPERATION

ONLY WHEN THE A/C SINGLE PRESSURE SW IS TURNED OFF OR THE WATER TEMP. SW NO.1 IS TURNED OFF, THE A/C CONDENSER FAN MOTOR AND THE RADIATOR FAN MOTOR ROTATE AT HIGH SPEED.

WHEN THE A/C SINGLE PRESSURE SW IS TURNED OFF, THE CURRENT FROM THE **RDI** FUSE FLOWS TO THE FAN NO.1 RELAY (POINT SIDE) → **TERMINAL 2** OF THE RADIATOR FAN MOTOR → **TERMINAL 1** → **GROUND**. AT THE SAME TIME, THE CURRENT FROM THE **CDS** FUSE FLOWS TO **TERMINAL 2** OF THE A/C CONDENSER FAN MOTOR → **TERMINAL 1** → **TERMINAL 3** OF THE FAN NO.2 RELAY → **TERMINAL 4** → **GROUND**.

AS THE CURRENT FLOWING IN PARALLEL FOR THE MOTORS AS ABOVE, THE MOTORS ROTATE AT HIGH SPEED.

FAN MOTOR OPERATION (5S-FE)

WITH THE IGNITION SW TURNED ON, THE CURRENT THROUGH THE **ECU-IG** FUSE FLOWS TO THE FAN NO.1 RELAY (COIL SIDE), FAN NO.2 RELAY (COIL SIDE). FURTHERMORE, THE CURRENT THROUGH THE FAN NO.1 RELAY (COIL SIDE) OR THE FAN NO.2 RELAY (COIL SIDE) FLOWS TO **TERMINAL 3** OF THE A/C SINGLE PRESSURE SW → **TERMINAL 2** → **TERMINAL 2** OF THE WATER TEMP. SW NO.1 → **TERMINAL 1** → **GROUND**, CAUSING THE FAN NO.1 RELAY TO TURN OFF AND THE FAN NO.2 RELAY TO TURN ON.

1. LOW SPEED OPERATION

WHEN THE IGNITION SW IS TURNED ON AND THE A/C SYSTEM IS ACTIVATED THE A/C CONDENSER FAN MOTOR AND THE RADIATOR FAN MOTOR ROTATES AT LOW SPEED.

WHEN THE A/C SYSTEM IS ACTIVATED, THE CURRENT FROM MG CLT RELAY FLOWS TO THE FAN NO.3 RELAY (COIL SIDE) → **GROUND**, CAUSING THE FAN NO.3 RELAY TO TURN ON. AS A RESULT, THE CURRENT THROUGH THE **CDS** FUSE FLOWS TO **TERMINAL 2** OF THE A/C CONDENSER FAN MOTOR → **TERMINAL 1** → **TERMINAL 3** OF THE FAN NO.2 RELAY → **TERMINAL 5** → **TERMINAL 5** OF THE FAN NO.3 RELAY → **TERMINAL 3** → **TERMINAL 2** OF THE RADIATOR FAN MOTOR → **TERMINAL 1** → **GROUND**. AS THIS FLOWING IN SERIES FOR THE MOTORS, THE MOTORS ROTATE AT LOW SPEED.

2. HIGH SPEED OPERATION

ONLY WHEN THE A/C SINGLE PRESSURE SW IS TURNED OFF OR THE WATER TEMP. SW NO.1 IS TURNED OFF, THE A/C CONDENSER FAN MOTOR AND THE RADIATOR FAN MOTOR ROTATE AT HIGH SPEED.

WHEN THE A/C SINGLE PRESSURE SW IS TURNED OFF, THE CURRENT FROM THE **RDI** FUSE FLOWS TO THE FAN NO.1 RELAY (POINT SIDE) → **TERMINAL 2** OF THE RADIATOR FAN MOTOR → **TERMINAL 1** → **GROUND**. AT THE SAME TIME, THE CURRENT FROM THE **CDS** FUSE FLOWS TO **TERMINAL 2** OF THE A/C CONDENSER FAN MOTOR → **TERMINAL 1** → **TERMINAL 3** OF THE FAN NO.2 RELAY → **TERMINAL 4** → **GROUND**.

AS THE CURRENT FLOWING IN PARALLEL FOR THE MOTORS AS ABOVE, THE MOTORS ROTATE AT HIGH SPEED.

RADIATOR FAN AND CONDENSER FAN(LHD)

SERVICE HINTS

A 4 A/C SINGLE PRESSURE SW

3-2:OPEN ABOVE APPROX. 15.5 KG/CM² (220 PSI, 1520 KPA)
CLOSE BELOW APPROX. 12.5 KG/CM² (142 PSI, 980 KPA)

W 3 WATER TEMP. SW NO.1

2-1:OPEN ABOVE APPROX. 95°C (203°F)

W 4 WATER TEMP. SW NO.2 (1MZ-FE)

1-GROUND:CLOSE ABOVE APPROX. 90°C (198°F)

○ : PARTS LOCATION

CODE	SEE PAGE	CODE	SEE PAGE	CODE	SEE PAGE
A 2	60(1MZ-FE LHD)	D 1	60(1MZ-FE LHD)	W 3	60(1MZ-FE LHD)
	62(5S-FE LHD)	F11	60(1MZ-FE LHD)		62(5S-FE LHD)
A 4	60(1MZ-FE LHD)		62(5S-FE LHD)	W 4	60(1MZ-FE LHD)
	62(5S-FE LHD)	R 1	60(1MZ-FE LHD)		
A14	64(LHD)		62(5S-FE LHD)		

: RELAY BLOCKS

CODE	SEE PAGE	RELAY BLOCKS (RELAY BLOCK LOCATION)
1	58	ENGINE ROOM R/B NO.1 (ENGINE COMPARTMENT LEFT)

: JUNCTION BLOCK AND WIRE HARNESS CONNECTOR

CODE	SEE PAGE	JUNCTION BLOCK AND WIRE HARNESS (CONNECTOR LOCATION)
1A	52(LHD)	COWL WIRE AND INSTRUMENT PANEL J/B (LOWER FINISH PANEL)
2B	56	ENGINE ROOM MAIN WIRE AND ENGINE ROOM J/B NO.2 (ENGINE COMPARTMENT LEFT)
2C		
2F		
2G		
2H		
2J	56	COWL WIRE AND ENGINE ROOM J/B NO.2 (ENGINE COMPARTMENT LEFT)
2K		

: CONNECTOR JOINING WIRE HARNESS AND WIRE HARNESS

CODE	SEE PAGE	JOINING WIRE HARNESS AND WIRE HARNESS (CONNECTOR LOCATION)
EB1	82(1MZ-FE LHD)	ENGINE ROOM MAIN WIRE AND ENGINE ROOM MAIN NO.3 WIRE (RADIATOR LH)
	84(5S-FE LHD)	
IH2	86(LHD)	ENGINE ROOM MAIN WIRE AND COWL WIRE (RIGHT KICK PANEL)
IL2	88(1MZ-FE LHD)	ENGINE WIRE AND COWL WIRE (UNDER THE BLOWER MOTOR)

▽ : GROUND POINTS

CODE	SEE PAGE	GROUND POINTS LOCATION
EB	82(1MZ-FE LHD)	BEHIND HEADLIGHT LH
	84(5S-FE LHD)	

: SPLICE POINTS

CODE	SEE PAGE	WIRE HARNESS WITH SPLICE POINTS	CODE	SEE PAGE	WIRE HARNESS WITH SPLICE POINTS
E 2	82(1MZ-FE LHD)	ENGINE ROOM MAIN WIRE	E 2	84(5S-FE LHD)	ENGINE ROOM MAIN WIRE

A 2 GRAY

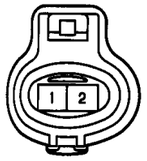

A 4 BLACK

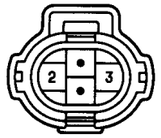

A14

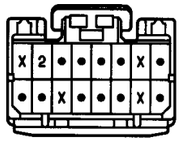

D 1 ORANGE

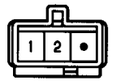

F11

R 1 GRAY

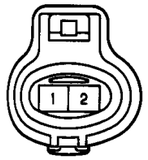

(1MZ-FE) W 3 GRAY

(5S-FE) W 3

(1MZ-FE) W 4 GRAY

SYSTEM OUTLINE

1. HEATER BLOWER MOTOR OPERATION

CURRENT IS APPLIED AT ALL TIMES THROUGH THE **HTR** FUSE TO **TERMINAL 1** OF THE HTR RELAY. WHEN THE IGNITION SW IS TURNED ON, CURRENT FLOWS THROUGH THE **HEATER** FUSE TO THE HTR RELAY (COIL SIDE) → **TERMINAL HR** OF THE A/C ECU. AT THE SAME TIME, CURRENT ALSO FLOWS FROM **HEATER** FUSE TO **TERMINAL IG+** OF THE A/C ECU.

(LOW SPEED OPERATION)

WHEN THE BLOWER SW (HEATER CONTROL SW) IS PUSHED TO **LOW** SPEED POSITION, THE CURRENT TO **TERMINAL HR** OF THE A/C ECU FLOWS TO **TERMINAL GND** OF THE A/C ECU → **GROUND** AND TURNS THE HTR RELAY ON. AS A RESULT, THE CURRENT TO **TERMINAL 1** OF THE HTR RELAY FLOWS TO **TERMINAL 2** → **TERMINAL 2** OF THE BLOWER MOTOR → **TERMINAL 1** → **TERMINAL 1** OF THE BLOWER RESISTOR → **TERMINAL 2** → **GROUND** AND CAUSES THE BLOWER MOTOR TO ROTATE AT LOW SPEED.

(HIGH SPEED OPREATION)

WHEN THE BLOWER SW (HEATER CONTROL SW) IS PUSHED TO **HIGH** SPEED POSITION, THE CURRENT TO **TERMINAL HR** OF THE A/C ECU FLOWS TO **TERMINAL GND** OF THE A/C ECU → **GROUND** AND TURNS THE HTR RELAY ON. AS A RESULT, THE CURRENT TO **TERMINAL 1** OF THE HTR RELAY FLOWS TO **TERMINAL 2** → **TERMINAL 2** OF THE BLOWER MOTOR → **TERMINAL 1** → **TERMINAL 4** OF THE A/C BLOWER MOTOR LINEAR CONTROLLER → **TERMINAL 2** → **TERMINAL BLW** OF THE A/C ECU (WHICH IS ACTIVATED WHEN THE BLOWER SW IS PUSHED HIGH SPEED POSITION) → **TERMINAL GND** → **GROUND** WITHOUT PASSING THROUGH THE BLOWER RESISTOR, CAUSING THE BLOWER MOTOR TO ROTATE AT HIGH SPEED.

2. AIR INLET CONTROL SERVO MOTOR OPERATION

(SWITCHING FROM FRESH TO RECIRC)

WITH IGNITION SW TURNED ON, WHEN THE RECIRC SW IS PUSHED, THE CURRENT FLOWS FROM THE **HEATER** FUSE TO **TERMINAL 7** OF THE AIR INLET CONTROL SERVO MOTOR → **TERMINAL 1** → **TERMINAL AIR** OF THE A/C ECU → **TERMINAL GND** → **GROUND**. THE MOTOR ROTATES AND THE DAMPER MOVES TO THE **RECIRC** SIDE. WHEN THE DAMPER IS MOVED TO THE **RECIRC** POSITION, THE CIRCUIT IS CUT INSIDE THE SERVO MOTOR AND THE DAMPER STOPS IN THAT POSITION.

(SWITCHING FROM RECIRC TO FRESH)

WITH THE IGNITION SW TURNED ON, WHEN THE FRESH SW IS PUSHED, THE CURRENT FLOWS FROM **TERMINAL 7** OF AIR INLET CONTROL SERVO MOTOR → **TERMINAL 3** → **TERMINAL AIF** OF THE A/C ECU → **TERMINAL GND** → **GROUND**. THE MOTOR ROTATES AND THE DAMPER STOPS AT THAT POSITION.

3. AIR VENT MODE CONTROL SERVO MOTOR OPERATION

WHEN THE MODE SELECT SW IN THE A/C ECU IS PUSHED, THE ECU ACTIVATES THE AIR VENT MODE CONTROL SERVO MOTOR, THIS CAUSES THE SERVO MOTOR TO ROTATE TO THE POSITION (FACE, BI-LEVEL, FOOT, FOOT/DEF, DEF) SELECTED USING THE MODE SELECT SW (HEATER CONTROL), AND MOVES THE MODE DAMPER.

4. AIR MIX CONTROL SERVO MOTOR OPERATION

WHEN THE TEMPERATURE SW IS TURNED TO THE "COOL" SIDE THE CURRENT FLOWS FROM **TERMINAL AMC** OF THE A/C ECU → **TERMINAL 1** OF THE AIR MIX CONTROL SERVO MOTOR → MOTOR → **TERMINAL 2** → **TERMINAL AMH** OF THE A/C ECU → **GROUND** AND THE MOTOR ROTATES. THE DAMPER OPENING ANGLE AT THIS TIME IS INPUT FROM **TERMINAL 3** OF THE SERVO MOTOR TO **TERMINAL TP** OF THE A/C ECU, THIS IS USED TO DETERMINE THE **DAMPER STOP** POSITION AND MAINTAIN THE SET TEMPERATURE.

WHEN THE TEMPERATURE SW (HEATER CONTROL SW) IS TURNED TO THE "HOT" SIDE, THE CURRENT FLOWS FROM **TERMINAL AMH** OF THE A/C ECU → **TERMINAL 2** OF THE AIR MIX CONTROL SERVO MOTOR → MOTOR → **TERMINAL 1** → **TERMINAL AMC** OF THE A/C ECU, ROTATING THE MOTOR IN REVERSE AND SWITCHING THE DAMPER FROM "COOL" TO "HOT".

5. AIR CONDITIONER OPERATION

THE A/C ECU RECEIVES VARIOUS SIGNALS, I.E., THE ENGINE RPM FROM THE METER, OUTSIDE AIR TEMPERATURE SIGNAL FROM THE A/C AMBIENT TEMP. SENSOR, COOLANT TEMPERATURE FROM THE ENGINE ECU (M/T), ENGINE AND ECT ECU (A/T) AND THE LOCK SIGNAL FROM THE A/C COMPRESSOR, ETC.

WHEN THE ENGINE IS STARTED AND THE A/C SW (A/C ECU) IS ON, A SIGNAL IS INPUT TO THE A/C ECU.

AS A RESULT, THE GROUND CIRCUIT IN THE A/C ECU IS CLOSED AND CURRENT FLOWS FROM THE **HEATER** FUSE TO **TERMINAL 1** OF THE MG CLT RELAY → **TERMINAL 2** → **TERMINAL MGCR** OF THE A/C ECU → **TERMINAL GND** → **GROUND**, TURNING THE MG CLT RELAY ON, SO THAT THE MAGNETIC CLUTCH IS ON AND THE A/C COMPRESSOR OPERATES.

AT THE SAME TIME, THE ENGINE ECU (M/T), ENGINE AND ECT ECU (A/T) DETECTS THE MAGNETIC CLUTCH IS ON AND THE A/C COMPRESSOR OPERATES.

OPEN DIRECTION TO AVOID LOWERING THE ENGINE RPM DURING A/C OPERATING.

- EVAPORATOR OUTLET AIR IS TOO LOW
- THERE IS A MARKED DIFFERENCE BETWEEN THE COMPRESSOR SPEED AND THE ENGINE SPEED.
- THE REFRIGERANT PRESSURE IS ABNORMALLY HIGH OR ABNORMALLY LOW.
- THE ENGINE SPEED IS TOO LOW.
- RAPID ACCELERATION OCCURS.

AUTOMATIC AIR CONDITIONER(LHD)

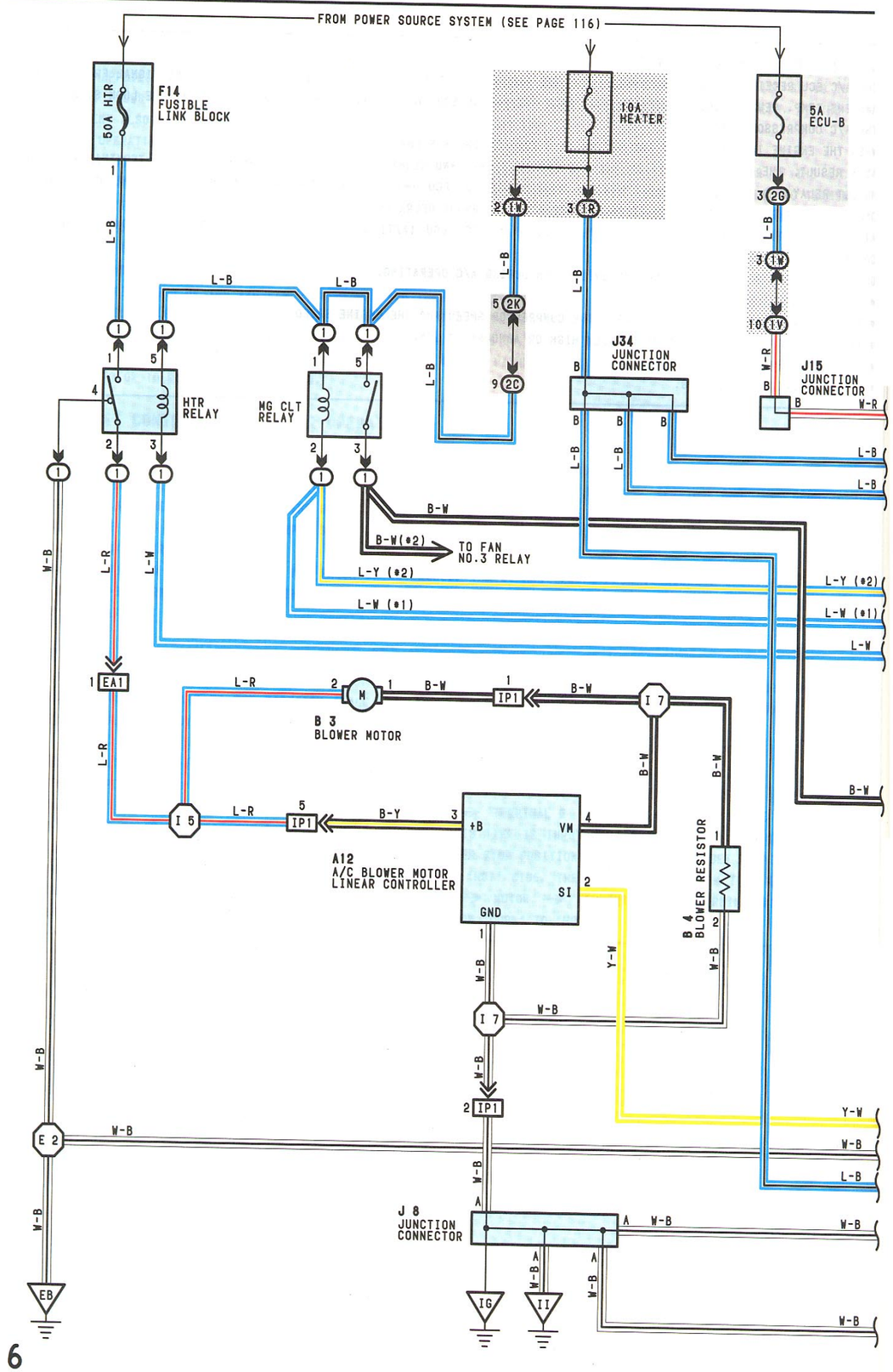

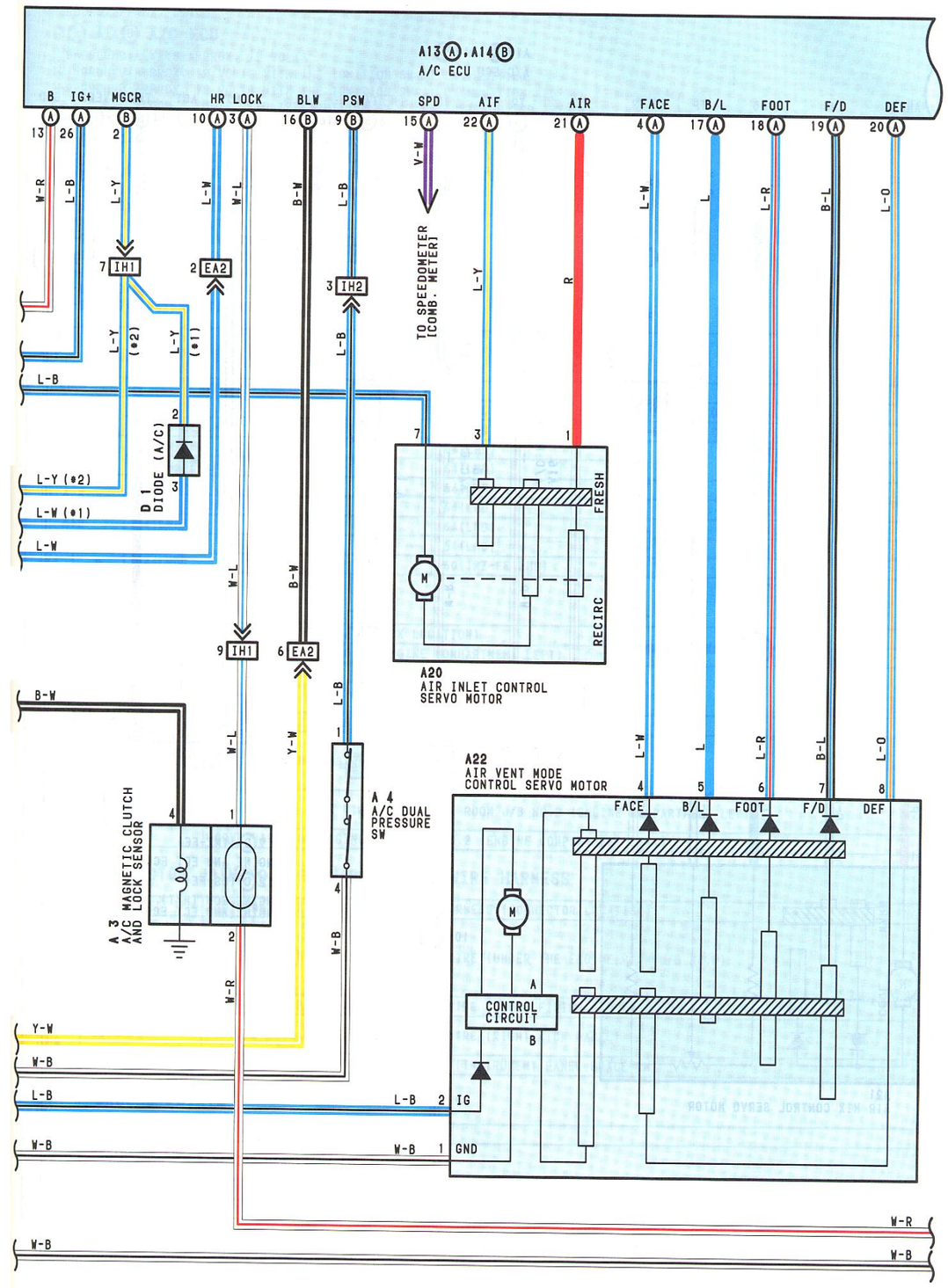

AUTOMATIC AIR CONDITIONER(LHD)

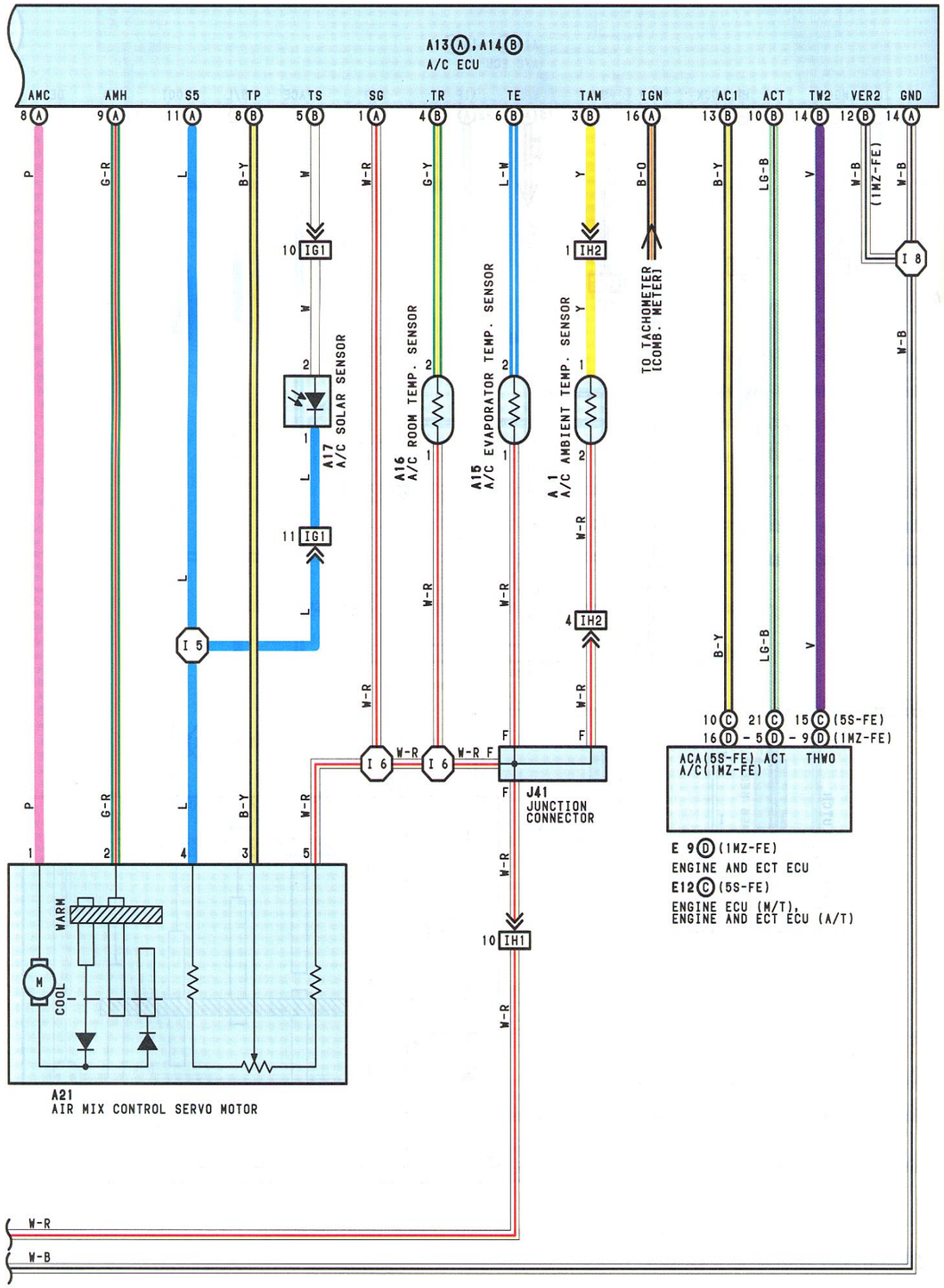

SERVICE HINTS

A 4 A/C DUAL PRESSURE SW

1-4:OPEN ABOVE APPROX. 15.5 KG/CM² (20 PSI, 1520 KPA) OR 32 KG/CM² (455 PSI, 3138 KPA)

A 3 A/C MAGNETIC CLUTCH

4-GROUND:APPROX. 3.7 Ω

A13Ⓐ,A14Ⓑ A/C ECU

B-GROUND:ALWAYS APPROX. 12 VOLTS
IG+-GROUND:APPROX. 12 VOLTS WITH THE IGNITION SW AT ON POSITION
HR-GROUND:APPROX. 12 VOLTS WITH THE IGNITION SW AT ON POSITION AND THE BLOWER MOTOR OFF.
BELOW 1 VOLTS WITH THE IGNITION SW AT ON POSITION AND THE BLOWER MOTOR ON.
PSW-GROUND:BELOW 1 VOLTS WITH THE IGNITION SW ON
AC1-GROUND:BELOW 1 VOLTS AT ENGINE START, COMPRESSOR ON.
OR MORE VOLTS AT ENGINE START, COMPRESSOR OFF.
BLW - GROUND:BELOW 1.5 VOLTS WITH THE IGNITION SW ON AND TURN THE BLOWER MOTOR
S5-SG:4-6 VOLTS WITH THE IGNITION SW ON
SG-GROUND:ALWAYS CONTINUITY
AMH-AMC:1.3-1.9 VOLTS WITH THE IGNITION SW OFF
AIF-GROUND:APPROX. 12 VOLTS WITH THE FRESH SW ON
AIR-GROUND:APPROX. 12 VOLTS WITH THE RECIRC SW ON
FACE-GROUND:APPROX. 12 VOLTS WITH THE FACE SW ON
DEF-GROUND:APPROX. 12 VOLTS WITH THE DEF SW ON
GND-GROUND:ALWAYS CONTINUITY

○ : PARTS LOCATION

CODE		SEE PAGE	CODE	SEE PAGE	CODE		SEE PAGE
A 1		60(1MZ-FE LHD)	A15	64(LHD)	E 9	D	64(LHD)
		62(5S-FE LHD)	A16	64(LHD)	E12	C	64(LHD)
A 3		60(1MZ-FE LHD)	A17	64(LHD)	F14		60(1MZ-FE LHD)
		62(5S-FE LHD)	A20	64(LHD)			62(5S-FE LHD)
A 4		60(1MZ-FE LHD)	A21	64(LHD)	J 8		66(LHD)
		62(5S-FE LHD)	A22	64(LHD)	J15		66(LHD)
A12		64(LHD)	B 3	64(LHD)	J34		66(LHD)
A13	A	64(LHD)	B 4	64(LHD)	J41		66(LHD)
A14	B	64(LHD)	D 1	60(1MZ-FE LHD)			

⬭ : RELAY BLOCKS

CODE	SEE PAGE	RELAY BLOCKS (RELAY BLOCK LOCATION)
1	58	ENGINE ROOM R/B NO.1 (ENGINE COMPARTMENT LEFT)

⬭ : JUNCTION BLOCK AND WIRE HARNESS CONNECTOR

CODE	SEE PAGE	JUNCTION BLOCK AND WIRE HARNESS (CONNECTOR LOCATION)
1R	52(LHD)	COWL WIRE AND INSTRUMENT PANEL J/B (LOWER FINISH PANEL)
1V		
1W		
2C	56	ENGINE ROOM MAIN WIRE AND ENGINE ROOM J/B NO.2 (ENGINE COMPARTMENT LEFT)
2G		
2K	56	COWL WIRE AND ENGINE ROOM J/B NO.2 (ENGINE COMPARTMENT LEFT)

▭ : CONNECTOR JOINING WIRE HARNESS AND WIRE HARNESS

CODE	SEE PAGE	JOINING WIRE HARNESS AND WIRE HARNESS (CONNECTOR LOCATION)
EA1	82(1MZ-FE LHD)	COWL WIRE AND ENGINE ROOM MAIN WIRE (UNDER THE ENGINE ROOM J/B NO.2)
	84(5S-FE LHD)	
EA2	82(1MZ-FE LHD)	
	84(5S-FE LHD)	
IG1	86(LHD)	INSTRUMENT PANEL WIRE AND COWL WIRE (LOWER FINISH PANEL)
IH1	86(LHD)	ENGINE ROOM MAIN WIRE AND COWL WIRE (RIGHT KICK PANEL)
IH2		
IP1	88(LHD)	COWL WIRE AND A/C SUB NO.1 WIRE (INSTRUMENT PANEL BRACE LH)

▽ : GROUND POINTS

CODE	SEE PAGE	GROUND POINTS LOCATION
EB	82(1MZ-FE LHD)	BEHIND HEADLIGHT LH
	84(5S-FE LHD)	
IG	86(LHD)	INSTRUMENT PANEL BRACE LH
II	86(LHD)	COWL SIDE PANEL RH

AUTOMATIC AIR CONDITIONER(LHD)

: SPLICE POINTS

CODE	SEE PAGE	WIRE HARNESS WITH SPLICE POINTS	CODE	SEE PAGE	WIRE HARNESS WITH SPLICE POINTS
E 2	82(1NZ-FE LHD)	ENGINE ROOM MAIN WIRE	I 6	88(LHD)	COWL WIRE
	84(5S-FE LHD)		I 7	88(LHD)	A/C SUB NO.1 WIRE
I 5	88(LHD)	COWL WIRE	I 8	88(LHD)	COWL WIRE

A 1 DARK GRAY

A 3 GRAY

A 4 BLACK

A12

A13 Ⓐ

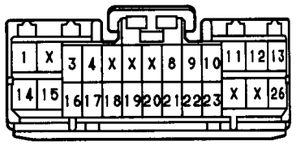

A14 Ⓑ

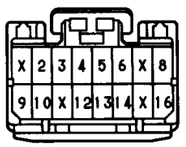

A15

A16 BLACK

A17 BLACK

A20 BLACK

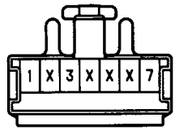

A21

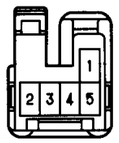

A22

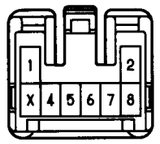

B 3

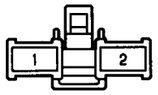

B 4 BLACK

D 1 ORANGE

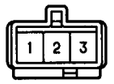

(1NZ-FE) E 9 Ⓓ

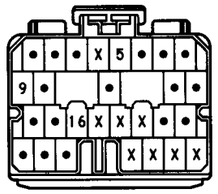

(5S-FE) E12 Ⓒ

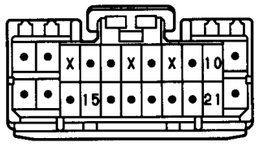

F14

J 8

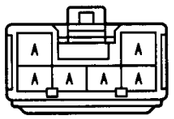

(HINT:SEE PAGE 7,23,39)

J15

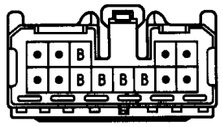

(HINT:SEE PAGE 7,23,39)

J34

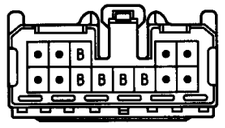

(HINT:SEE PAGE 7,23,39)

J41

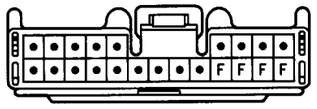

(HINT:SEE PAGE 7,23,39)

J GROUND POINT(LHD)

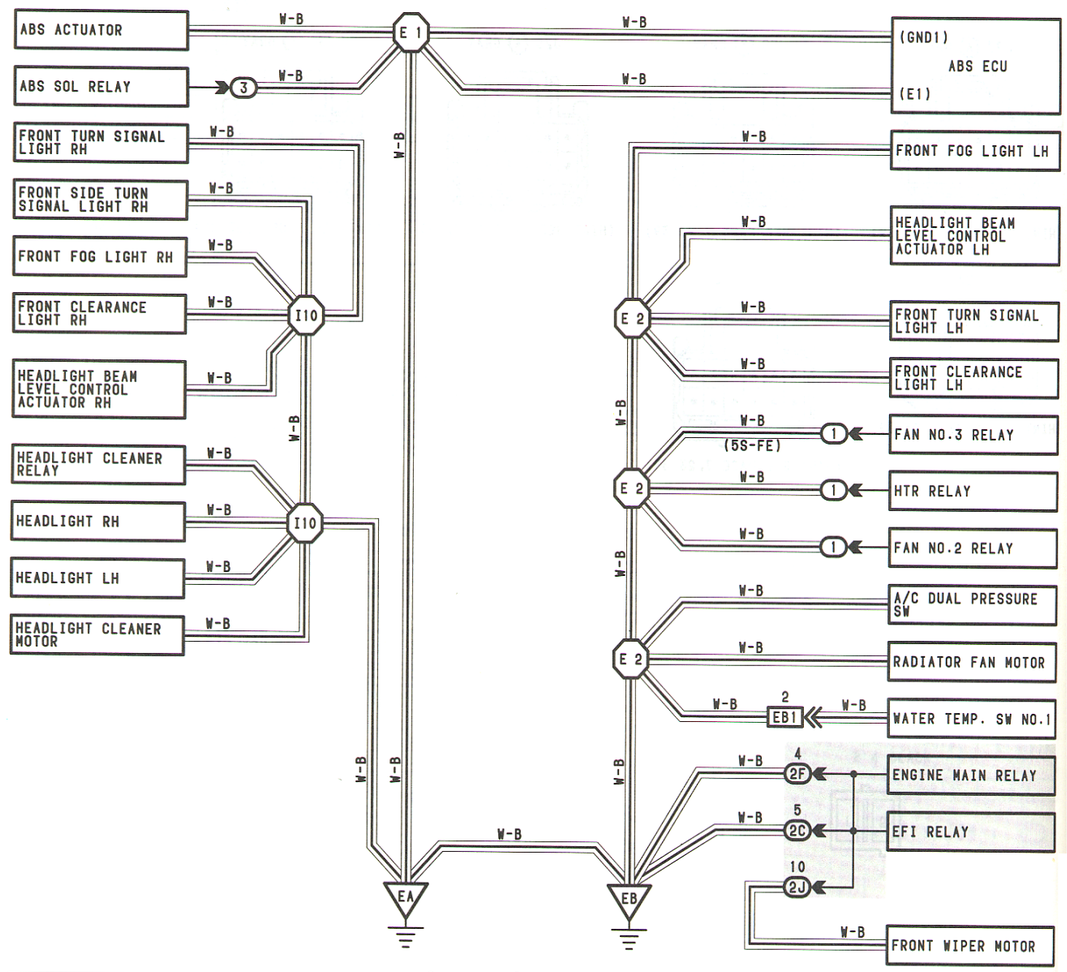

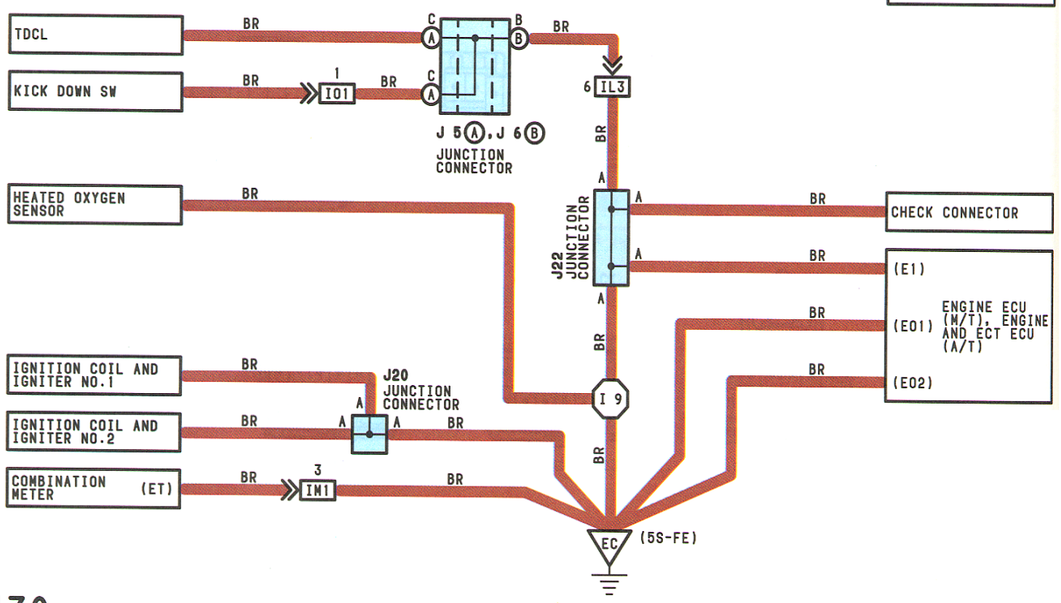

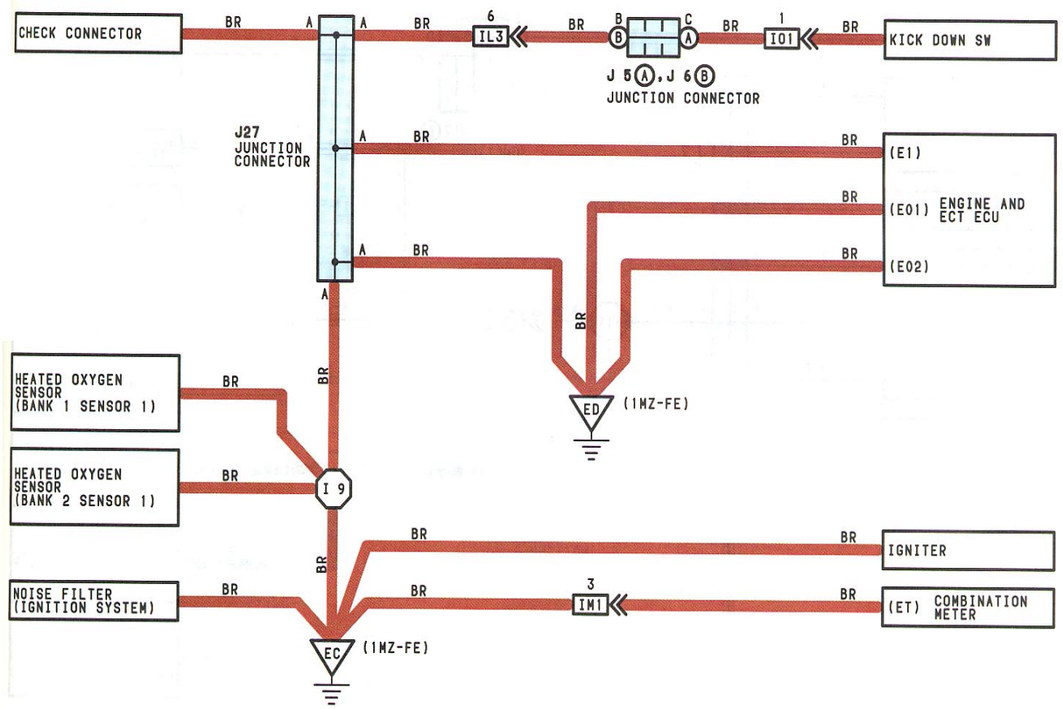

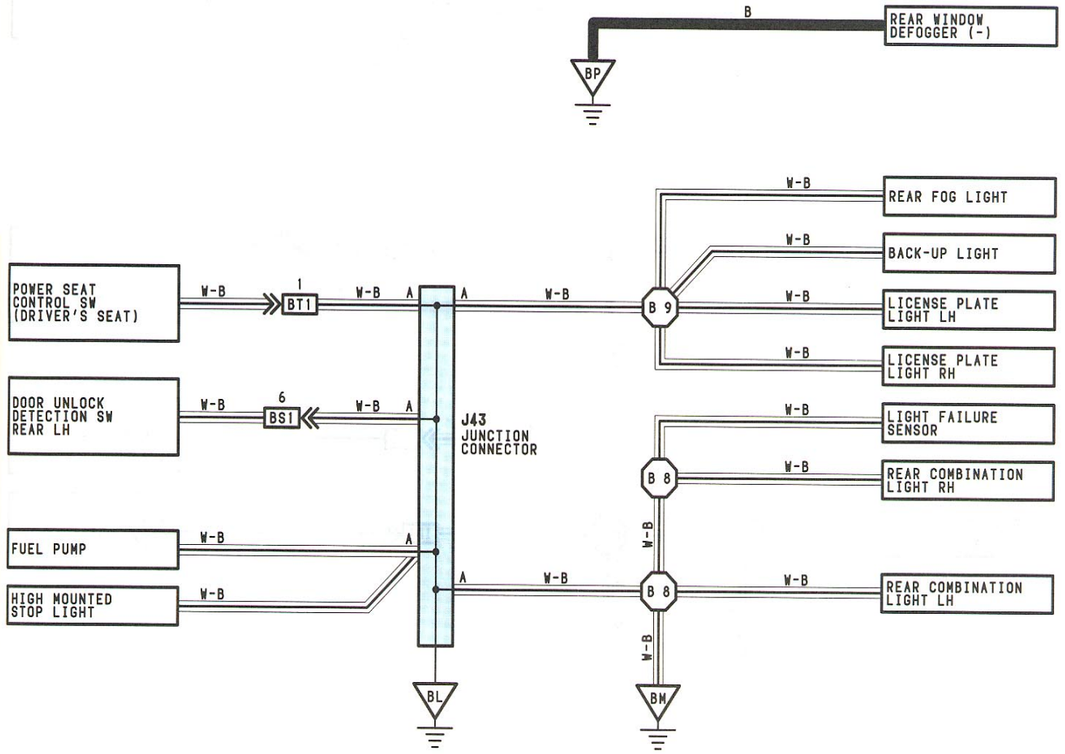

J GROUND POINT(LHD)

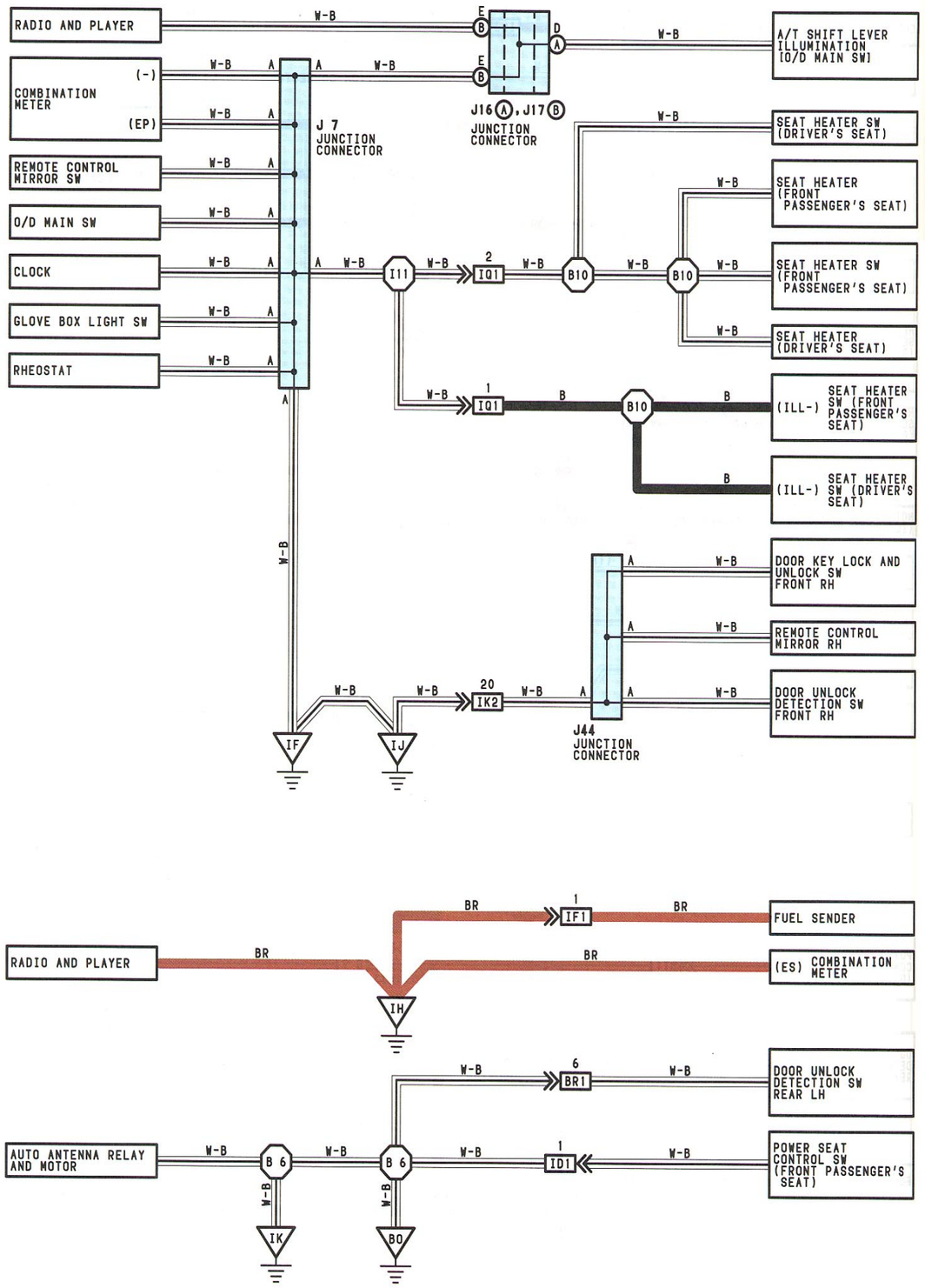

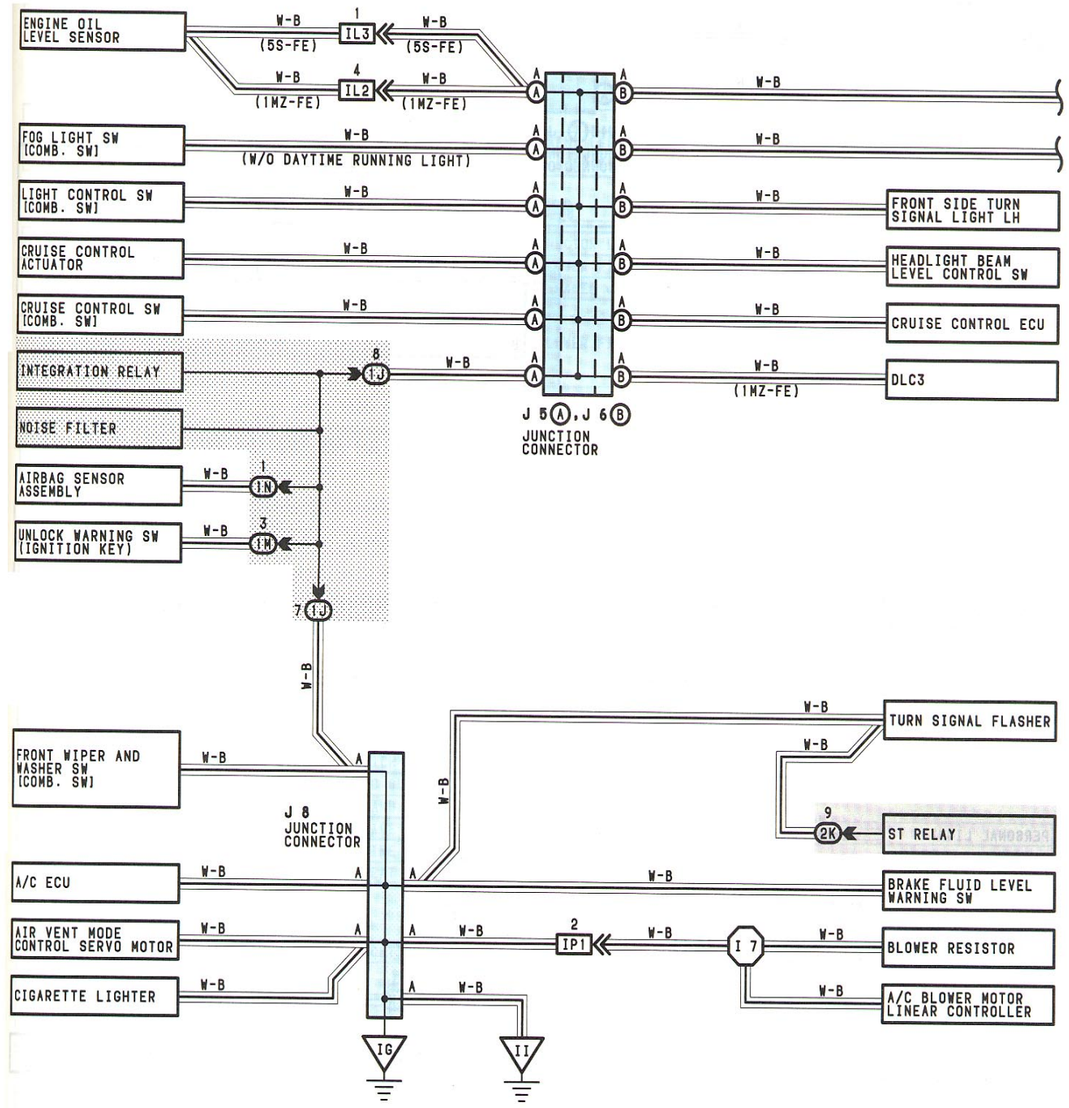

J GROUND POINT(LHD)

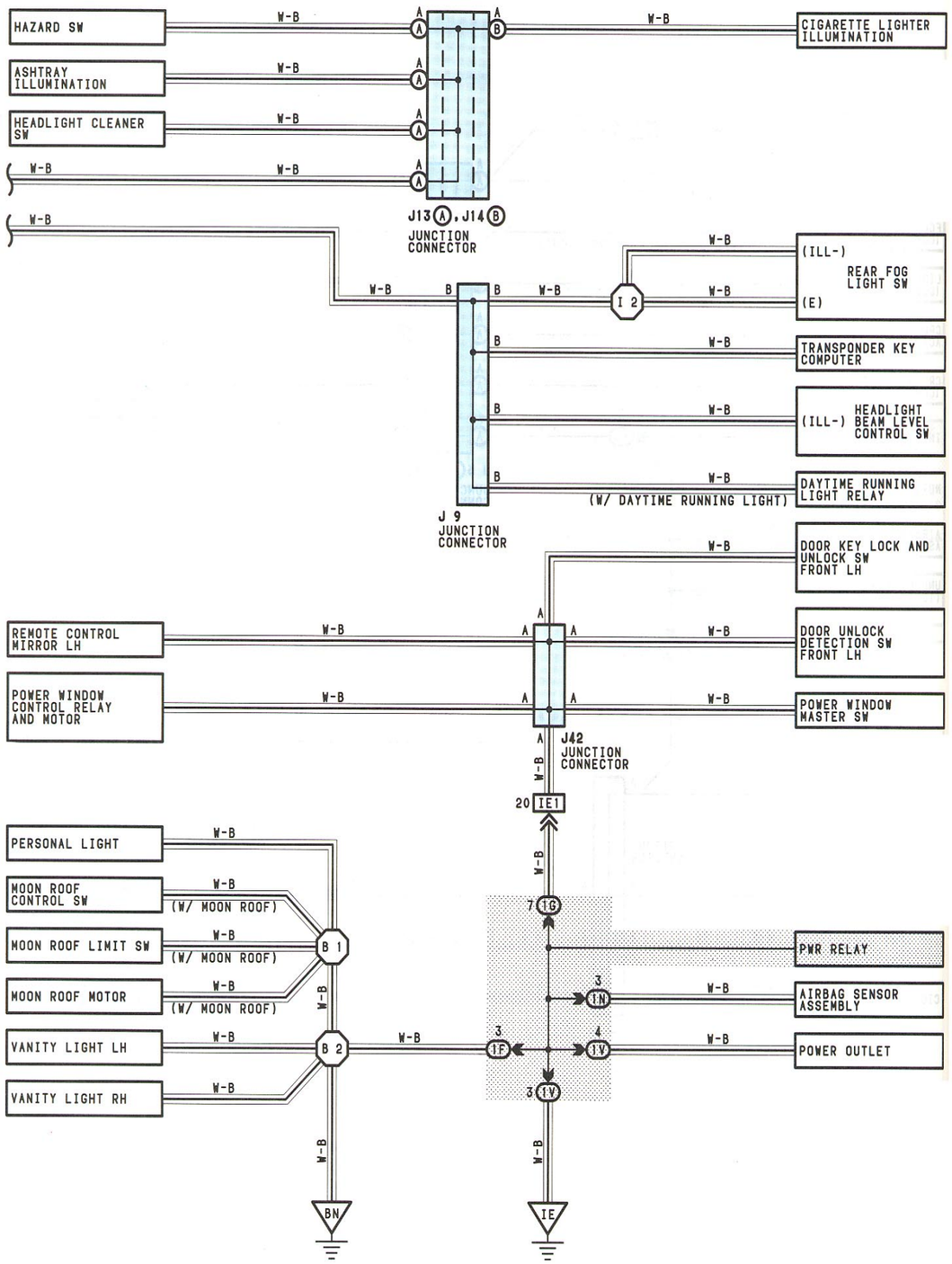

○ : PARTS LOCATION

CODE		SEE PAGE	CODE		SEE PAGE	CODE	SEE PAGE
J 5	A	66(LHD)	J13	A	66(LHD)	J22	66(LHD)
J 6	B	66(LHD)	J14	B	66(LHD)	J27	66(LHD)
J 7		66(LHD)	J16	A	66(LHD)	J42	68(LHD)
J 8		66(LHD)	J17	B	66(LHD)	J43	68(LHD)
J 9		66(LHD)	J20		66(LHD)	J44	68(LHD)

⬭ : RELAY BLOCKS

CODE	SEE PAGE	RELAY BLOCKS (RELAY BLOCK LOCATION)
1	58	ENGINE ROOM R/B NO.1 (ENGINE COMPARTMENT LEFT)
3	59	ENGINE ROOM R/B NO.3 (RADIATOR UPPER SUPPORT LH)

: JUNCTION BLOCK AND WIRE HARNESS CONNECTOR

CODE	SEE PAGE	JUNCTION BLOCK AND WIRE HARNESS (CONNECTOR LOCATION)
1F	52(LHD)	ROOF WIRE AND INSTRUMENT PANEL J/B (LOWER FINISH PANEL)
1G	52(LHD)	INSTRUMENT PANEL WIRE AND INSTRUMENT PANEL J/B (LOWER FINISH PANEL)
1J	52(LHD)	COWL WIRE AND INSTRUMENT PANEL J/B (LOWER FINISH PANEL)
1M		
1N		
1V		
2C	56	ENGINE ROOM MAIN WIRE AND ENGINE ROOM J/B NO.2 (ENGINE COMPARTMENT LEFT)
2F		
2J	56	COWL WIRE AND ENGINE ROOM J/B NO.2 (ENGINE COMPARTMENT LEFT)
2K		

□ : CONNECTOR JOINING WIRE HARNESS AND WIRE HARNESS

CODE	SEE PAGE	JOINING WIRE HARNESS AND WIRE HARNESS (CONNECTOR LOCATION)
EB1	82(1MZ-FE LHD)	ENGINE ROOM MAIN WIRE AND ENGINE ROOM MAIN NO.3 WIRE (RADIATOR LH)
	84(5S-FE LHD)	
ID1	86(LHD)	FLOOR WIRE AND COWL WIRE (LEFT KICK PANEL)
IE1	86(LHD)	FRONT DOOR LH WIRE AND INSTRUMENT PANEL WIRE (LEFT KICK PANEL)
IF1	86(LHD)	FLOOR WIRE AND INSTRUMENT PANEL WIRE (LEFT KICK PANEL)
IK2	88(LHD)	FRONT DOOR RH WIRE AND INSTRUMENT PANEL WIRE (RIGHT KICK PANEL)
IL2	88(1MZ-FE LHD)	ENGINE WIRE AND COWL WIRE (UNDER THE BLOWER MOTOR)
IL3	88(LHD)	
IM1	88(LHD)	ENGINE WIRE AND INSTRUMENT PANEL WIRE (UNDER THE BLOWER MOTOR)
IO1	88(LHD)	COWL WIRE AND SWICH WIRE (INSTRUMENT PANEL BRACE LH)
IP1	88(LHD)	COWL WIRE AND A/C SUB NO.1 WIRE (INSTRUMENT PANEL BRACE LH)
IQ1	88(LHD)	FLOOR NO.3 WIRE AND INSTRUMENT PANEL WIRE (UNDER THE CONSOLE BOX)
BR1	90(LHD)	REAR DOOR NO.1 WIRE AND FLOOR NO.2 WIRE (UNDER THE RIGHT CENTER PILLAR)
BS1	90(LHD)	REAR DOOR NO.2 WIRE AND FLOOR WIRE (UNDER THE LEFT CENTER PILLAR)
BT1	92(LHD)	FLOOR WIRE AND SEAT NO.1 WIRE (UNDER THE DRIVER'S SEAT)

▽ : GROUND POINTS

CODE	SEE PAGE	GROUND POINTS LOCATION
EA	82(1MZ-FE LHD)	BEHIND HEADLIGHT RH
	84(5S-FE LHD)	
EB	82(1MZ-FE LHD)	BEHIND HEADLIGHT LH
	84(5S-FE LHD)	
EC	82(1MZ-FE LHD)	REAR SIDE OF THE SURGE TANK
	84(5S-FE LHD)	BEHIND INTAKE MANIFOLD
ED	82(1MZ-FE LHD)	SURGE TANK RH
IE	86(LHD)	COWL SIDE PANEL LH
IF	86(LHD)	LEFT KICK PANEL
IG	86(LHD)	INSTRUMENT PANEL BRACE LH
IH	86(LHD)	INSTRUMENT PANEL BRACE RH
II	86(LHD)	COWL SIDE PANEL RH
IJ	86(LHD)	RIGHT KICK PANEL
IK		
BL	90(LHD)	UNDER THE LEFT CENTER PILLAR
BM	90(LHD)	BACK PANEL CENTER
BN	90(LHD)	ROOF LEFT
BO	90(LHD)	UNDER THE RIGHT CENTER PILLAR
BP	90(LHD)	RIGHT QUARTER PILLAR

J GROUND POINT(LHD)

: SPLICE POINTS

CODE	SEE PAGE	WIRE HARNESS WITH SPLICE POINTS	CODE	SEE PAGE	WIRE HARNESS WITH SPLICE POINTS
E 1	82(1MZ-FE LHD)	ENGINE ROOM MAIN WIRE	I11	88(LHD)	INSTRUMENT PANEL WIRE
	84(5S-FE LHD)		B 1	90(LHD)	ROOF WIRE
E 2	82(1MZ-FE LHD)		B 2		
	84(5S-FE LHD)		B 6	90(LHD)	FLOOR NO.2 WIRE
I 7	88(LHD)	A/C SUB NO.1 WIRE	B 8	90(LHD)	FLOOR WIRE
I 9	88(LHD)	ENGINE WIRE	B 9		
I10	88(LHD)	ENGINE ROOM MAIN WIRE	B10	92(LHD)	FLOOR NO.3 WIRE

J 5 (A) GRAY

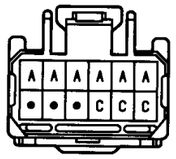

(HINT:SEE PAGE 7,23,39)

J 6 (B) GRAY

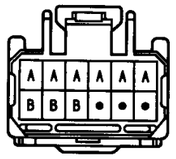

(HINT:SEE PAGE 7,23,39)

J 7 ORANGE

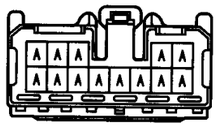

(HINT:SEE PAGE 7,23,39)

J 8

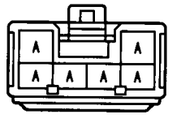

(HINT:SEE PAGE 7,23,39)

J 9

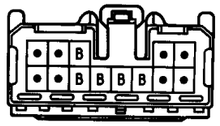

(HINT:SEE PAGE 7,23,39)

J13 (A) BLUE

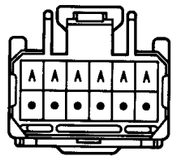

(HINT:SEE PAGE 7,23,39)

J14 (B) BLUE

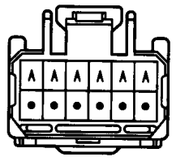

(HINT:SEE PAGE 7,23,39)

J16 (A) BLACK

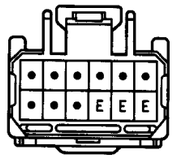

(HINT:SEE PAGE 7,23,39)

J17 (B) BLACK

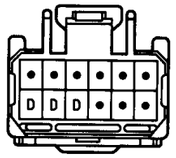

(HINT:SEE PAGE 7,23,39)

(5S-FE) J20 GRAY

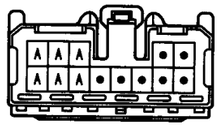

(HINT:SEE PAGE 7,23,39)

(5S-FE) J22

(HINT:SEE PAGE 7,23,39)

(1MZ-FE) J27

(HINT:SEE PAGE 7,23,39)

J42

(HINT:SEE PAGE 7,23,39)

J43

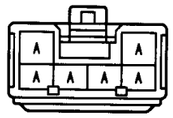

(HINT:SEE PAGE 7,23,39)

J44

(HINT:SEE PAGE 7,23,39)

SYSTEM INDEX

Location No.1 to 47

SYSTEMS	LOCATION	SYSTEMS	LOCATION	SYSTEMS	LOCATION
ABS	18-2(LHD) 41-2(RHD)	Engine Immobiliser System (5S-FE)	3-2(LHD) 27-2(RHD)	Power Window	15-2(LHD) 38-2(RHD)
Auto Antenna	16-2(LHD) 39-2(RHD)	Front Fog Light	11-2(LHD) 34-2(RHD)	Radiator Fan and Condenser Fan	23-3(LHD) 46-3(RHD)
Automatic Air Conditioner	23-2(LHD) 47-2(RHD)	Front Wiper and Washer	10-2(LHD) 33-2(RHD)	Radio and Player	16-3(LHD) 39-3(RHD)
Back-Up Light	9-4(LHD) 32-4(RHD)	Headlight	4-2(w/ Daytime Running Light LHD) 5-2(w/o Daytime Running Light LHD) 28-2(RHD)	Rear Fog Light	11-3(LHD) 34-3(RHD)
Charging	1-4(LHD) 25-4(RHD)	Headlight Beam Level Control	5-3(LHD) 28-3(RHD)	Rear Window Defogger	46-2(RHD)
Cigarette Lighter and Clock	13-4(LHD) 36-4(RHD)	Headlight Cleaner	22-2(LHD) 44-2(RHD)	Rear Window Defogger and Mirror Heat	23-2(LHD)
Combination Meter	22-3(LHD) 44-3(RHD)	Horn	12-4(LHD) 35-4(RHD)	Remote Control Mirror	10-3(LHD) 33-3(RHD)
Cruise Control	19-2(LHD) 45-2(RHD)	Illumination	7-2(LHD) 30-2(RHD)	Seat Heater	17-4(LHD)
Door Lock Control	14-2(LHD) 37-2(RHD)	Interior Light	8-3(LHD) 31-3(RHD)	SRS	13-2(LHD) 36-2(RHD)
ECT and A/T Indicator (1MZ-FE)	20-2(LHD) 42-2(RHD)	Light Reminder Buzzer	8-2(LHD) 31-2(RHD)	Starting and Ignition	1-2(LHD) 25-2(RHD)
ECT and A/T Indicator (5S-FE)	21-2(LHD) 43-2(RHD)	Moon Roof	12-2(LHD) 35-2(RHD)	Stop Light	6-3(LHD) 29-3(RHD)
Engine Control (1MZ-FE)	2-4(LHD) 26-4(RHD)	Power Outlet	13-3(LHD) 36-3(RHD)	Taillight	6-2(LHD) 29-2(RHD)
Engine Control (5S-FE)	3-4(LHD) 27-4(RHD)	Power Seat	17-2(LHD) 40-2(RHD)	Turn Signal and Hazard Warning Light	9-2(LHD) 32-2(RHD)
Engine Immobiliser System (1MZ-FE)	2-2(LHD) 26-2(RHD)	Power source	1~24-1(LHD) 25~47-1(RHD)	Unlock Warning	12-3(LHD) 35-3(RHD)

1 CAMRY (LHD) ELECTRICAL WIRING DIAGRAM

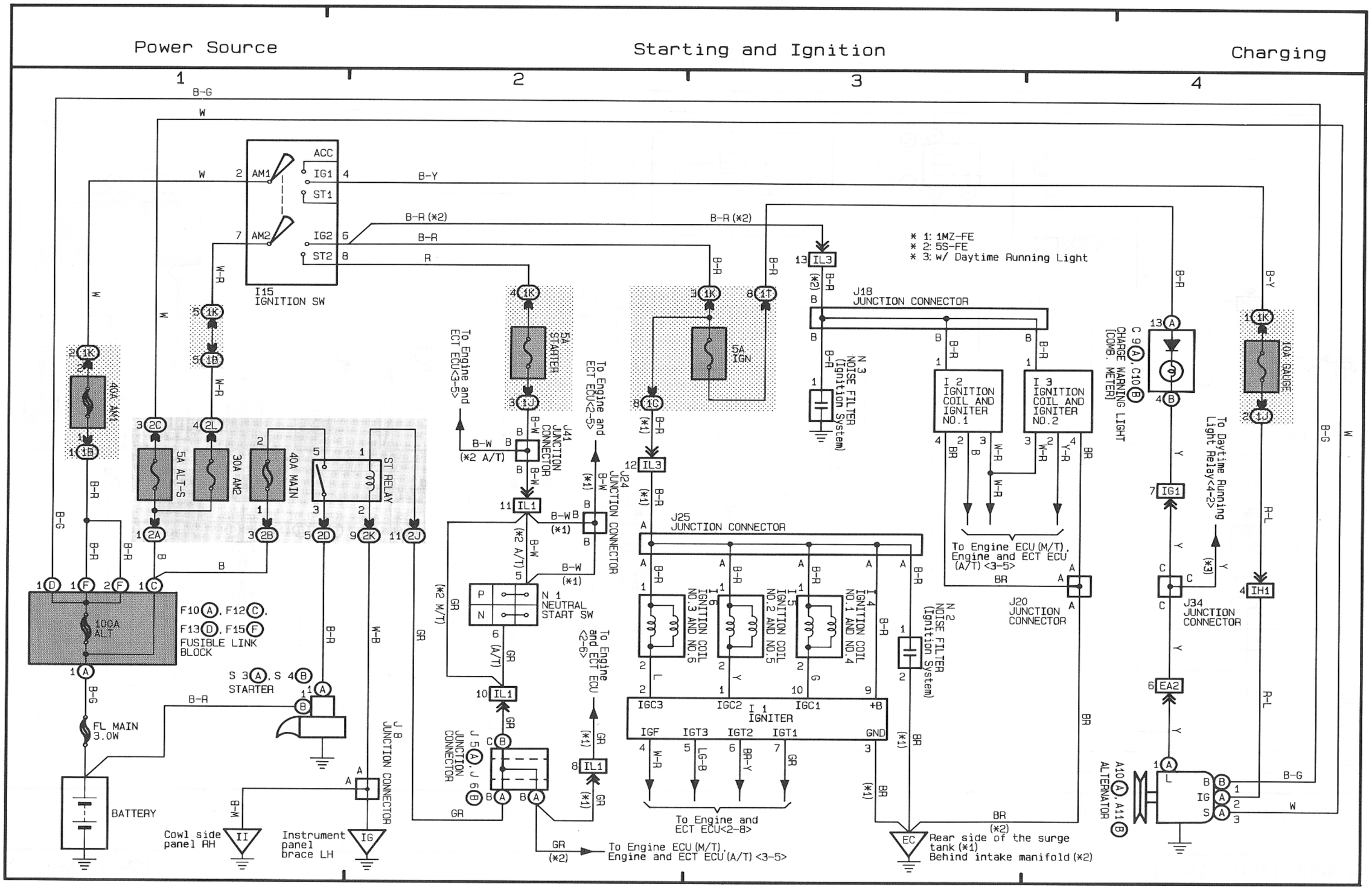

2 CAMRY (LHD)

(Cont. next page)

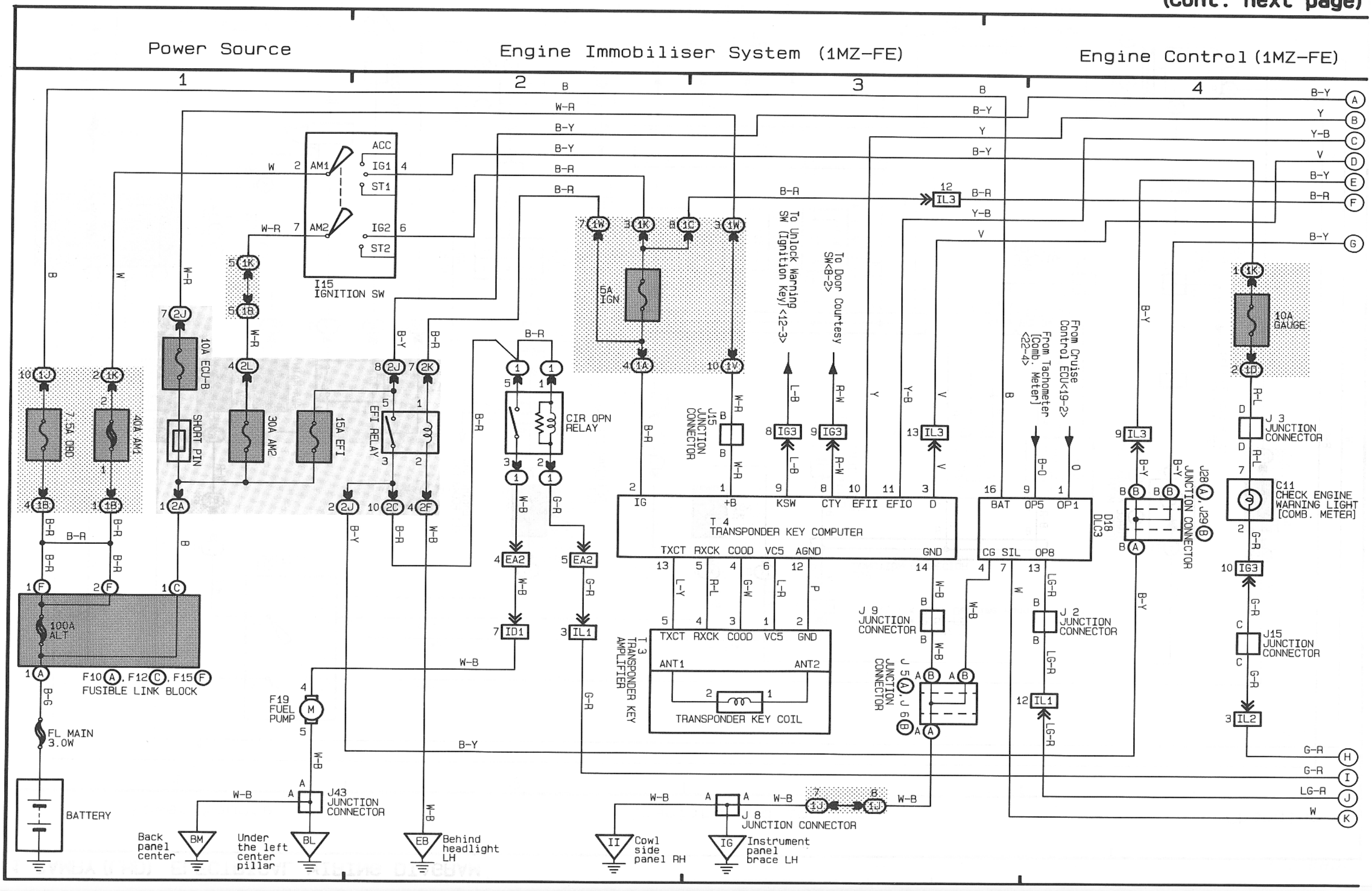

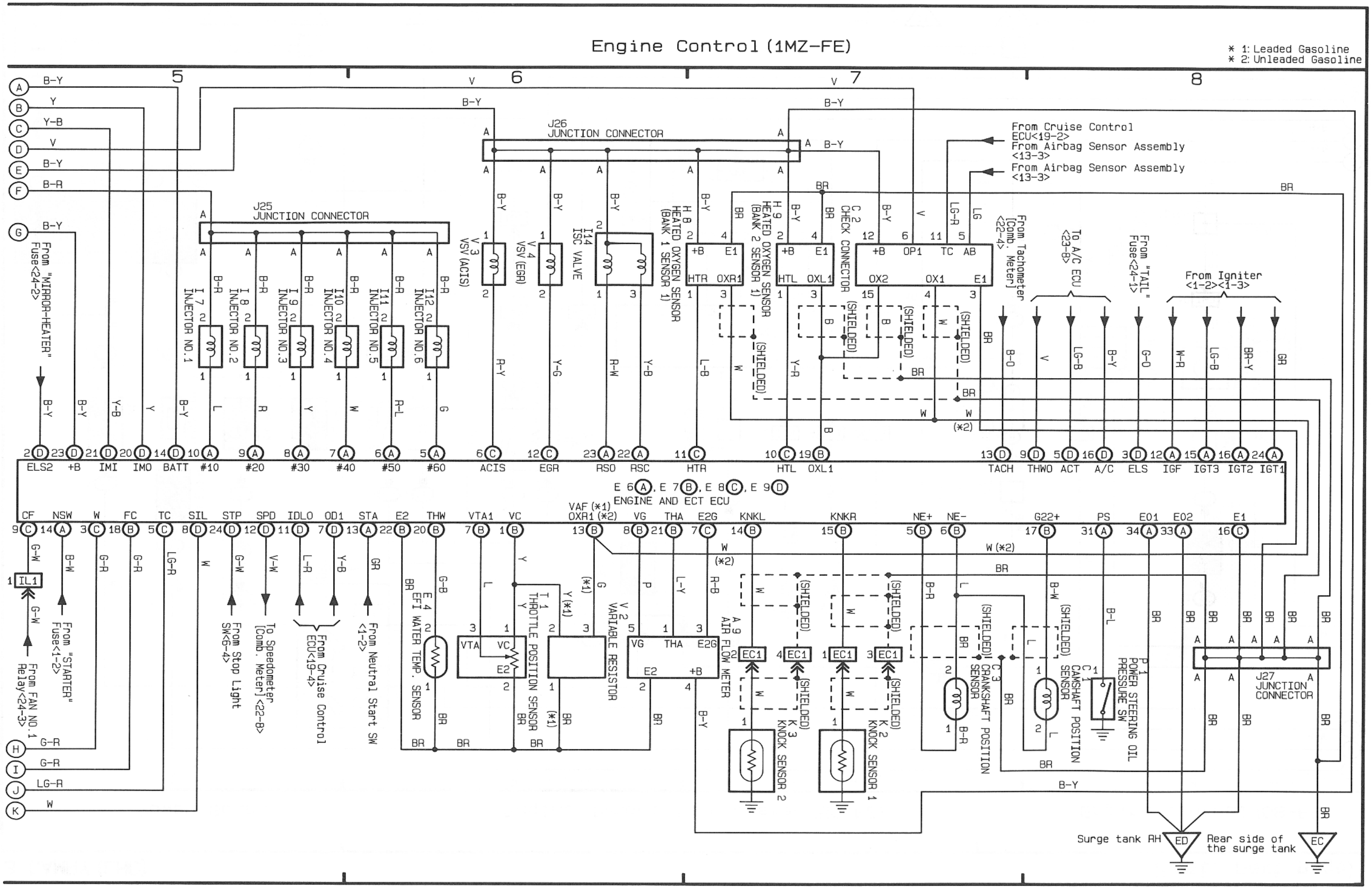
Engine Control (1MZ-FE)
* 1: Leaded Gasoline
* 2: Unleaded Gasoline
J26 JUNCTION CONNECTOR
J25 JUNCTION CONNECTOR
J27 JUNCTION CONNECTOR
From Cruise Control ECU<19-2>
From Airbag Sensor Assembly <13-3>
From Airbag Sensor Assembly <13-3>
From "MIRROR-HEATER" Fuse<24-2>
From "STARTER" Fuse<1-2>
From FAN NO.1 Relay<24-3>
From Stop Light SW<6-4>
To Speedometer [Comb. Meter]<22-8>
From Cruise Control ECU<19-4>
From Neutral Start SW <1-2>
From Tachometer [Comb. Meter] <22-4>
To A/C ECU <23-8>
From "TAIL" Fuse<24-1>
From Igniter <1-2><1-3>
V 3 VSV (ACIS)
V 4 VSV (EGR)
I14 ISC VALVE
H 8 HEATED OXYGEN SENSOR (BANK 1 SENSOR 1)
H 9 HEATED OXYGEN SENSOR (BANK 2 SENSOR 1)
C 2 CHECK CONNECTOR
I 7 INJECTOR NO.1
I 8 INJECTOR NO.2
I 9 INJECTOR NO.3
I10 INJECTOR NO.4
I11 INJECTOR NO.5
I12 INJECTOR NO.6
ELS2 +B IMI IMO BATT #10 #20 #30 #40 #50 #60 ACIS EGR RSO RSC HTR HTL OXL1 TACH THWO ACT A/C ELS IGF IGT3 IGT2 IGT1
E 6 (A), E 7 (B), E 8 (C), E 9 (D)
ENGINE AND ECT ECU
CF NSW W FC TC SIL STP SPD IDLO OD1 STA E2 THW VTA1 VC VAF (*1) OXR1 (*2) VG THA E2G KNKL KNKR NE+ NE- G22+ PS E01 E02 E1
E 4 EFI WATER TEMP. SENSOR
T 1 THROTTLE POSITION SENSOR
V 2 VARIABLE RESISTOR
A 9 AIR FLOW METER
K 3 KNOCK SENSOR 2
K 2 KNOCK SENSOR 1
C 3 CRANKSHAFT POSITION SENSOR
C 1 CAMSHAFT POSITION SENSOR
P 1 POWER STEERING OIL PRESSURE SW
Surge tank RH
Rear side of the surge tank

(Cont. next page)

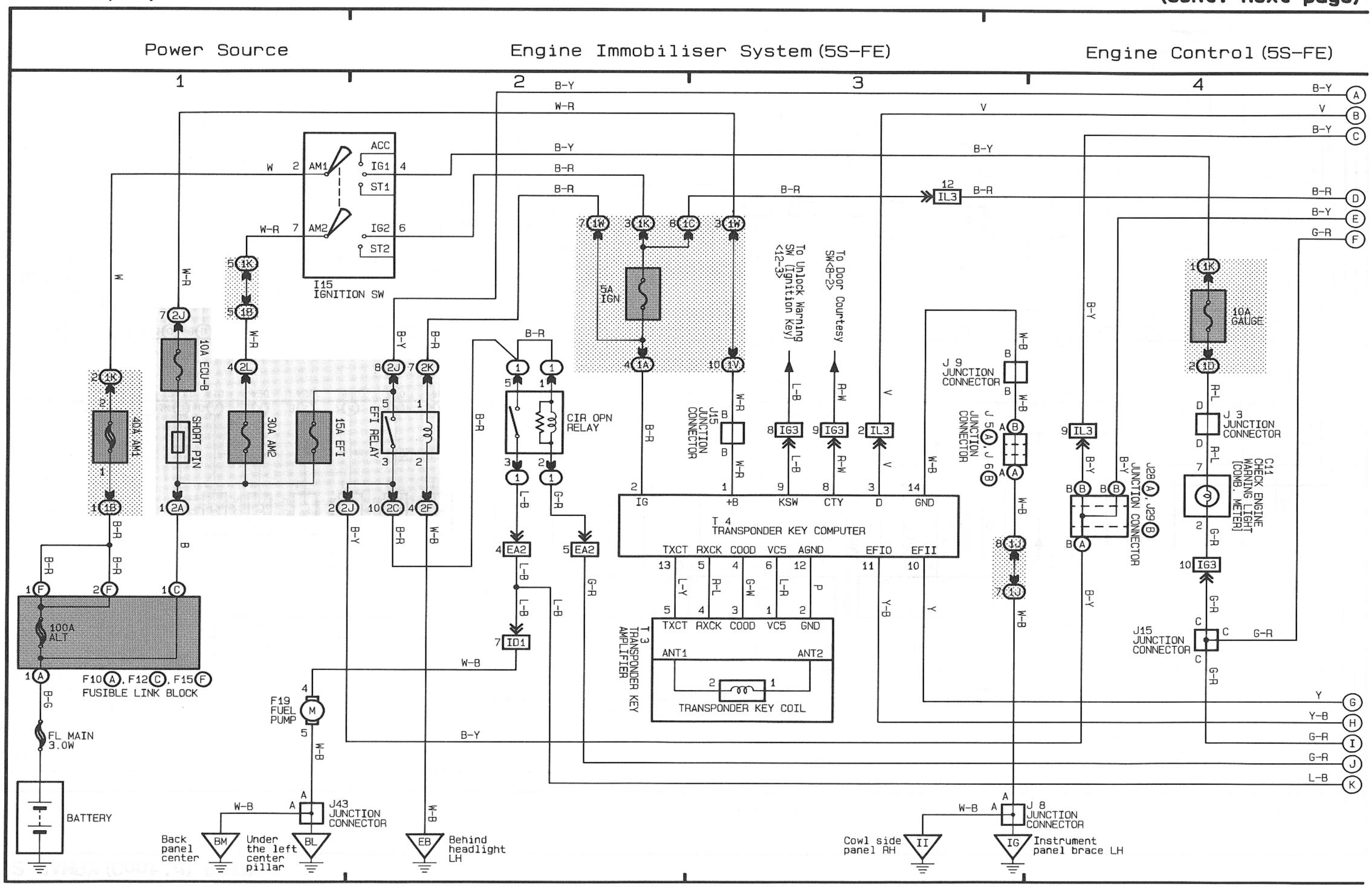

Engine Control (5S-FE)

* 1: Leaded Gasoline

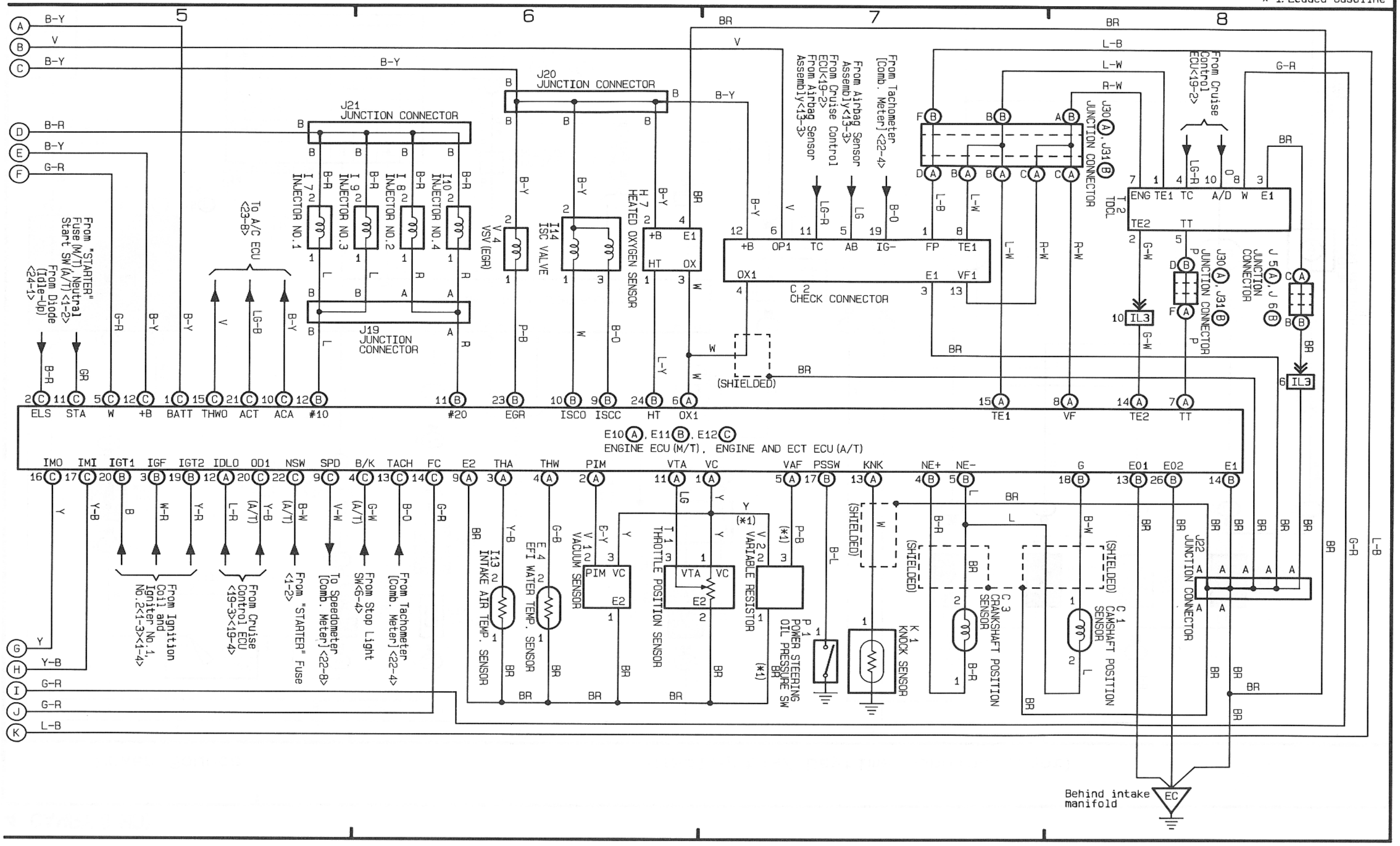

4 CAMRY (LHD)

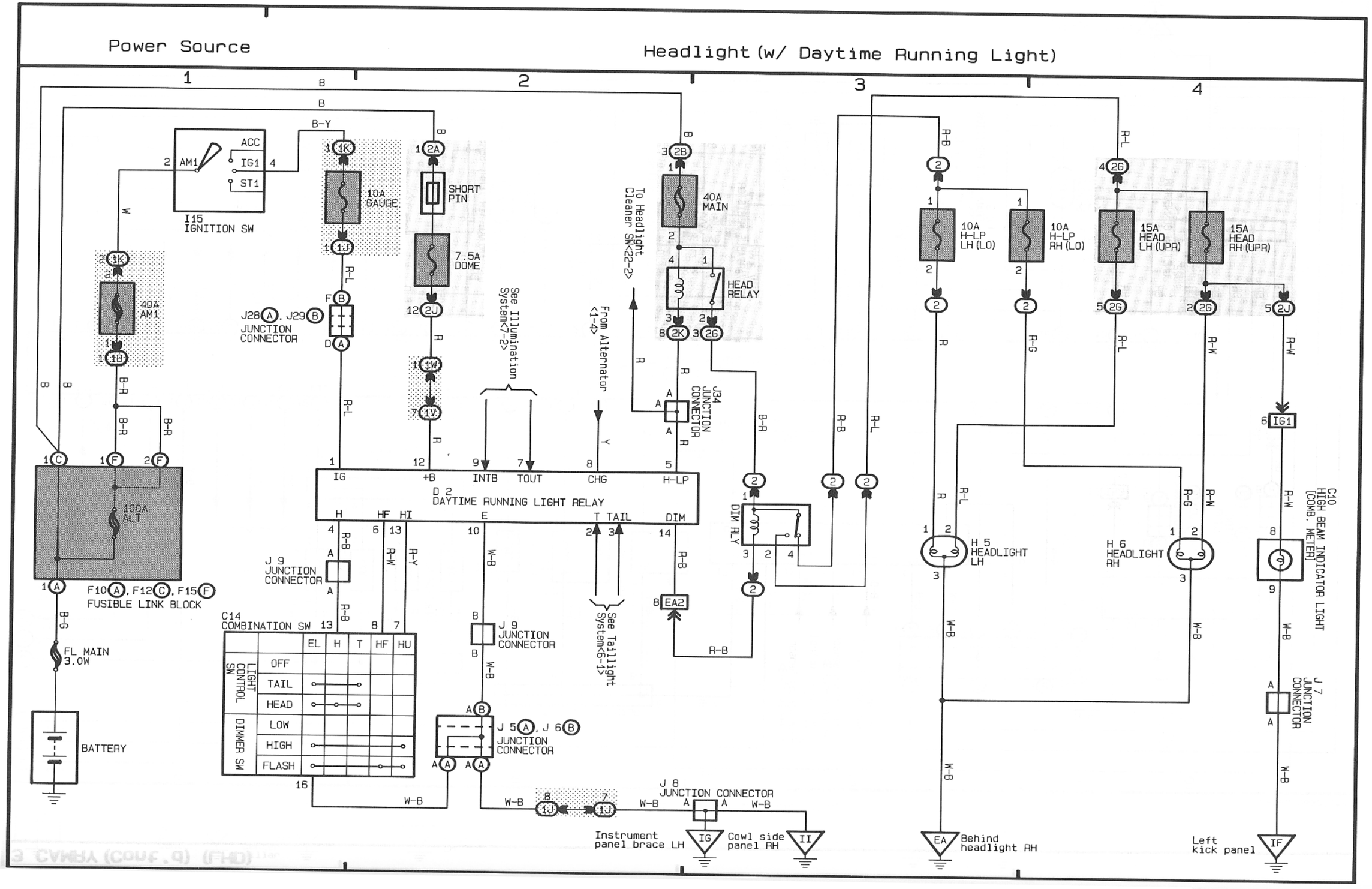
Power Source
Headlight (w/ Daytime Running Light)
1
2
3
4
I15 IGNITION SW
ACC
IG1
ST1
AM1
10A GAUGE
SHORT PIN
7.5A DOME
40A AM1
J28 A, J29 B JUNCTION CONNECTOR
100A ALT
F10 A, F12 C, F15 F FUSIBLE LINK BLOCK
FL MAIN 3.0W
BATTERY
See Illumination System<7-2>
From Alternator <1-4>
To Headlight Cleaner SW<22-2>
40A MAIN
HEAD RELAY
J34 JUNCTION CONNECTOR
D 2 DAYTIME RUNNING LIGHT RELAY
IG
+B
INTB
TOUT
CHG
H-LP
H
HF
HI
E
T
TAIL
DIM
DIM RLY
J 9 JUNCTION CONNECTOR
C14 COMBINATION SW
EL
H
T
HF
HU
LIGHT CONTROL SW
OFF
TAIL
HEAD
DIMMER SW
LOW
HIGH
FLASH
See Taillight System<6-1>
EA2
J 5 A, J 6 B JUNCTION CONNECTOR
J 8 JUNCTION CONNECTOR
Instrument panel brace LH
Cowl side panel RH
10A H-LP LH (LO)
10A H-LP RH (LO)
15A HEAD LH (UPR)
15A HEAD RH (UPR)
H 5 HEADLIGHT LH
H 6 HEADLIGHT RH
Behind headlight RH
C10 HIGH BEAM INDICATOR LIGHT [COMB. METER]
J 7 JUNCTION CONNECTOR
IG1
Left kick panel

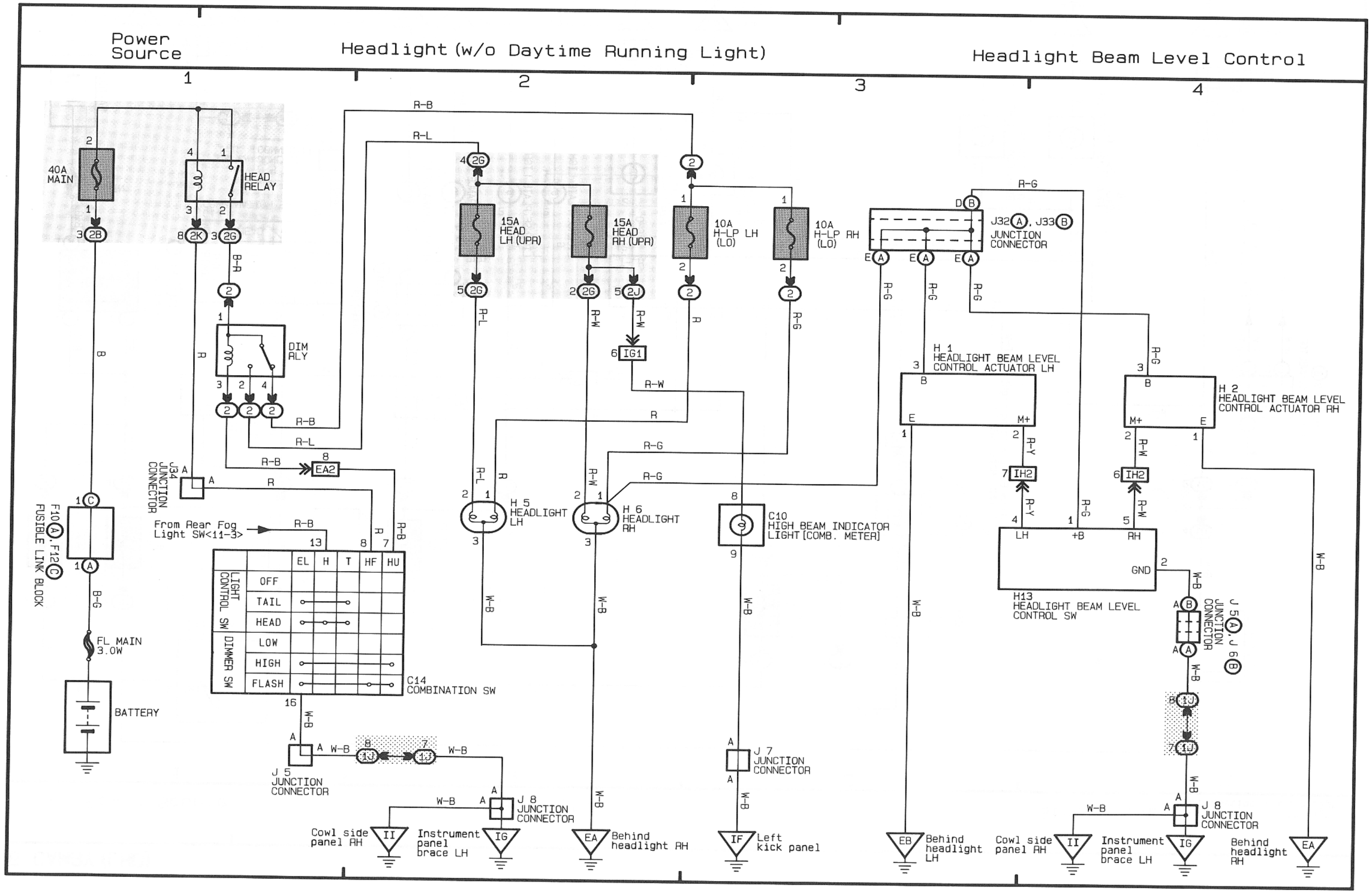
Power Source
Headlight (w/o Daytime Running Light)
Headlight Beam Level Control
1
2
3
4
40A MAIN
HEAD RELAY
DIM RLY
15A HEAD LH (UPR)
15A HEAD RH (UPR)
10A H-LP LH (LO)
10A H-LP RH (LO)
J32, J33 JUNCTION CONNECTOR
H 1 HEADLIGHT BEAM LEVEL CONTROL ACTUATOR LH
H 2 HEADLIGHT BEAM LEVEL CONTROL ACTUATOR RH
H13 HEADLIGHT BEAM LEVEL CONTROL SW
J34 JUNCTION CONNECTOR
From Rear Fog Light SW<11-3>
LIGHT CONTROL SW
DIMMER SW
OFF
TAIL
HEAD
LOW
HIGH
FLASH
EL
H
T
HF
HU
C14 COMBINATION SW
F10, F12 FUSIBLE LINK BLOCK
FL MAIN 3.0W
BATTERY
J 5 JUNCTION CONNECTOR
J 8 JUNCTION CONNECTOR
H 5 HEADLIGHT LH
H 6 HEADLIGHT RH
C10 HIGH BEAM INDICATOR LIGHT [COMB. METER]
J 7 JUNCTION CONNECTOR
Cowl side panel RH
Instrument panel brace LH
Behind headlight RH
Left kick panel
Behind headlight LH

6 CAMRY (LHD)

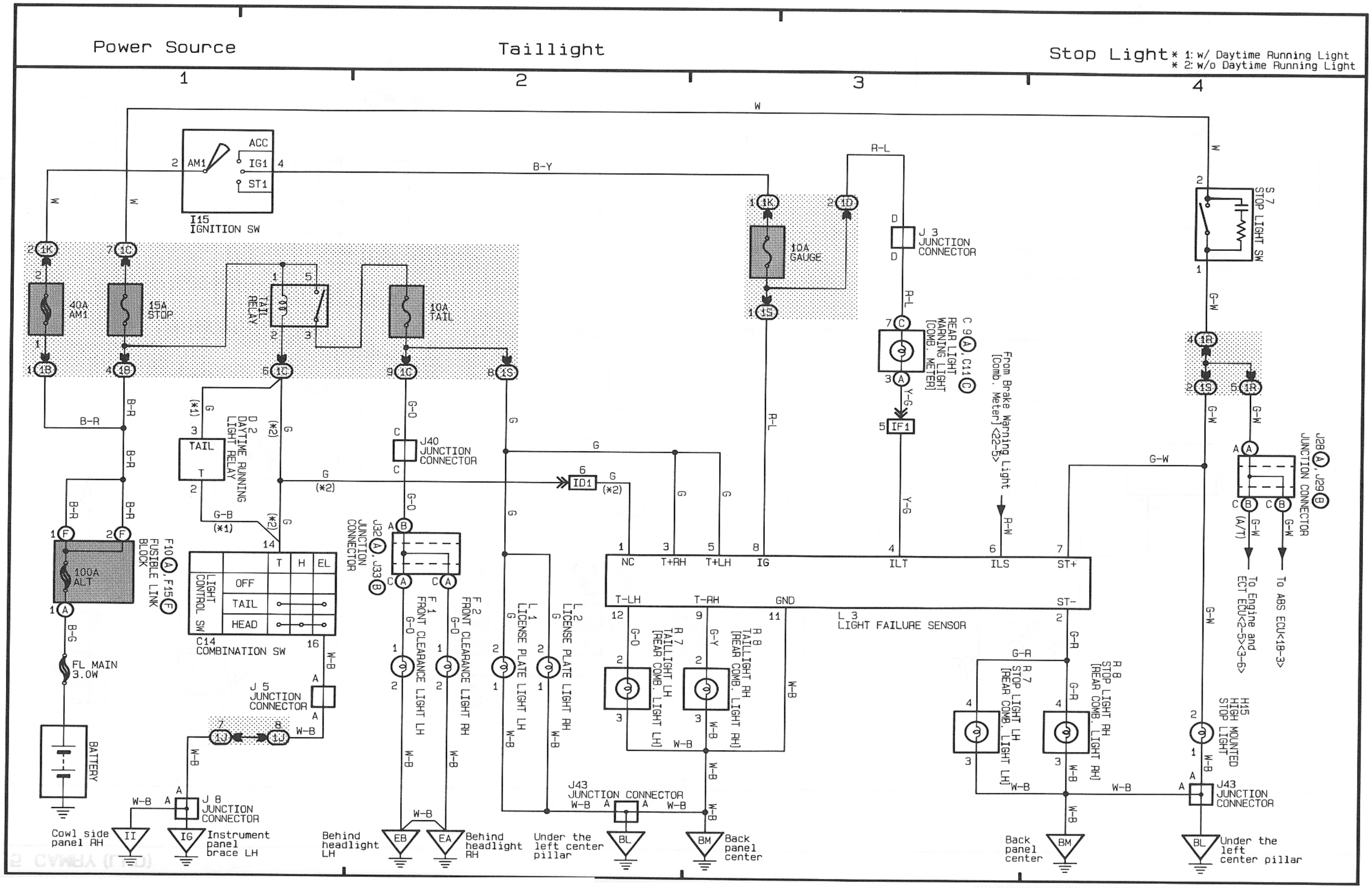
Power Source
Taillight
Stop Light
* 1: w/ Daytime Running Light
* 2: w/o Daytime Running Light
1
2
3
4
I15 IGNITION SW
ACC
IG1
ST1
AM1
40A AM1
15A STOP
TAIL RELAY
10A TAIL
10A GAUGE
J 3 JUNCTION CONNECTOR
S 7 STOP LIGHT SW
D 2 DAYTIME RUNNING LIGHT RELAY
TAIL
J40 JUNCTION CONNECTOR
ID1
J32, J33 JUNCTION CONNECTOR
F10, F15 FUSIBLE LINK BLOCK
100A ALT
FL MAIN 3.0W
BATTERY
C14 COMBINATION SW
LIGHT CONTROL SW
OFF
TAIL
HEAD
T
H
EL
J 5 JUNCTION CONNECTOR
J 8 JUNCTION CONNECTOR
F 1 FRONT CLEARANCE LIGHT LH
F 2 FRONT CLEARANCE LIGHT RH
L 1 LICENSE PLATE LIGHT LH
L 2 LICENSE PLATE LIGHT RH
J43 JUNCTION CONNECTOR
C 9, C11 REAR LIGHT WARNING LIGHT [COMB. METER]
From Brake Warning Light [Comb. Meter] <22-5>
IF1
NC
T+RH
T+LH
IG
ILT
ILS
ST+
ST-
T-LH
T-RH
GND
L 3 LIGHT FAILURE SENSOR
R 7 TAILLIGHT LH [REAR COMB. LIGHT LH]
R 8 TAILLIGHT RH [REAR COMB. LIGHT RH]
R 7 STOP LIGHT LH [REAR COMB. LIGHT LH]
R 8 STOP LIGHT RH [REAR COMB. LIGHT RH]
H45 HIGH MOUNTED STOP LIGHT
J28, J29 JUNCTION CONNECTOR
(A/T)
To Engine and ECT ECU<2-5><3-6>
To ABS ECU<18-3>
Cowl side panel RH
Instrument panel brace LH
Behind headlight LH
Behind headlight RH
Under the left center pillar
Back panel center
Back panel center
Under the left center pillar

7 CAMRY (LHD)

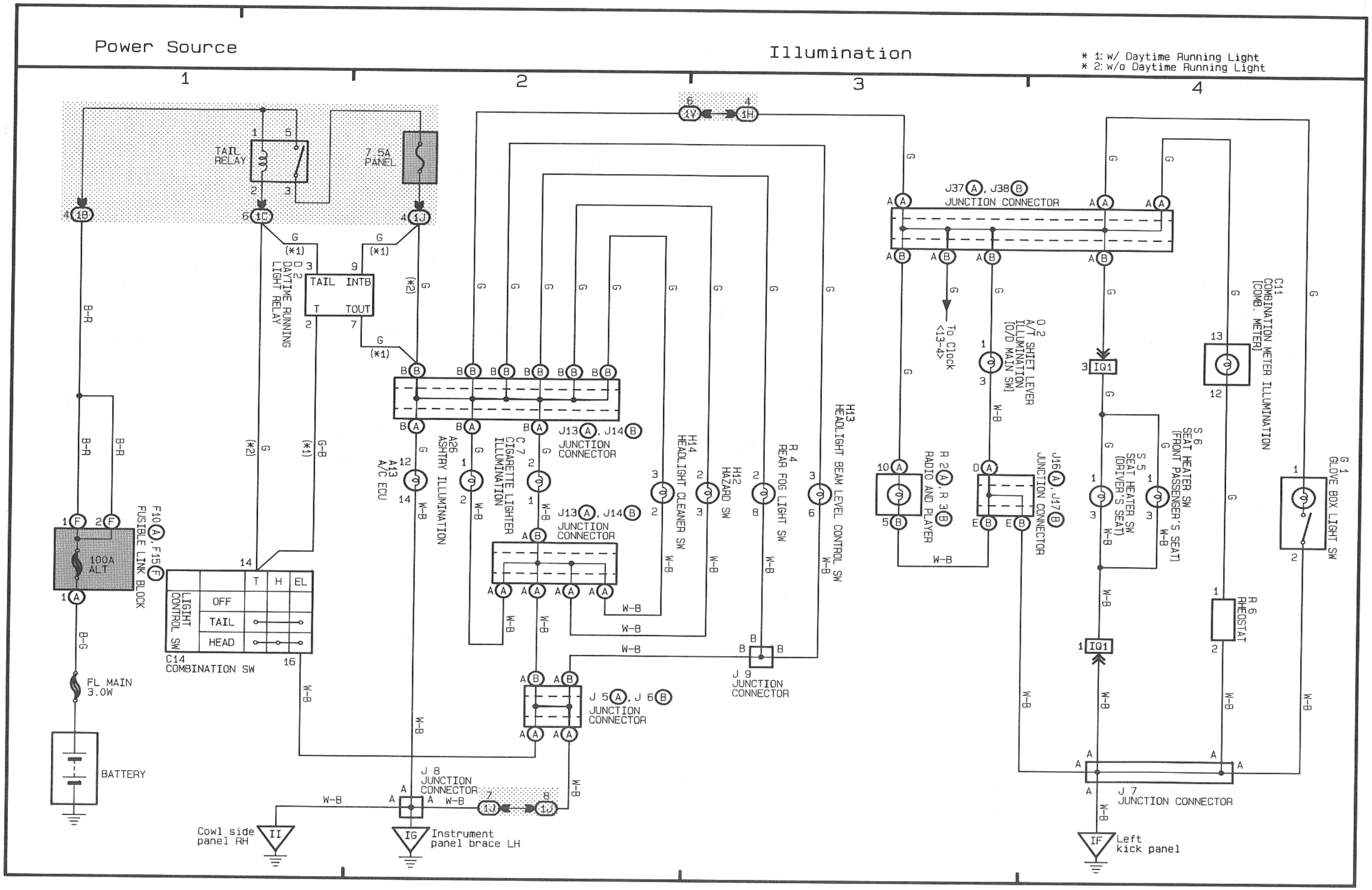
Power Source
Illumination
* 1: w/ Daytime Running Light
* 2: w/o Daytime Running Light
1
2
3
4
TAIL RELAY
7.5A PANEL
DAYTIME RUNNING LIGHT RELAY
TAIL INTB
T TOUT
F10 (A), F15 (F)
FUSIBLE LINK BLOCK
100A ALT
FL MAIN 3.0W
BATTERY
C14 COMBINATION SW
LIGHT CONTROL SW
OFF
TAIL
HEAD
T H EL
J13 (A), J14 (B)
JUNCTION CONNECTOR
A13 A/C ECU
A26 ASHTRY ILLUMINATION
C 7 CIGARETTE LIGHTER ILLUMINATION
H14 HEADLIGHT CLEANER SW
H12 HAZARD SW
R 4 REAR FOG LIGHT SW
H13 HEADLIGHT BEAM LEVEL CONTROL SW
J 9 JUNCTION CONNECTOR
J 5 (A), J 6 (B)
J 8 JUNCTION CONNECTOR
Cowl side panel RH
Instrument panel brace LH
J37 (A), J38 (B)
JUNCTION CONNECTOR
To Clock <13-4>
O 2 A/T SHIFT LEVER ILLUMINATION [O/D MAIN SW]
R 2 (A), R 3 (B)
RADIO AND PLAYER
J16 (A), J17 (B)
JUNCTION CONNECTOR
S 5 SEAT HEATER SW (DRIVER'S SEAT)
S 6 SEAT HEATER SW (FRONT PASSENGER'S SEAT)
C11 COMBINATION METER ILLUMINATION [COMB. METER]
G 1 GLOVE BOX LIGHT SW
R 6 RHEOSTAT
J 7 JUNCTION CONNECTOR
Left kick panel

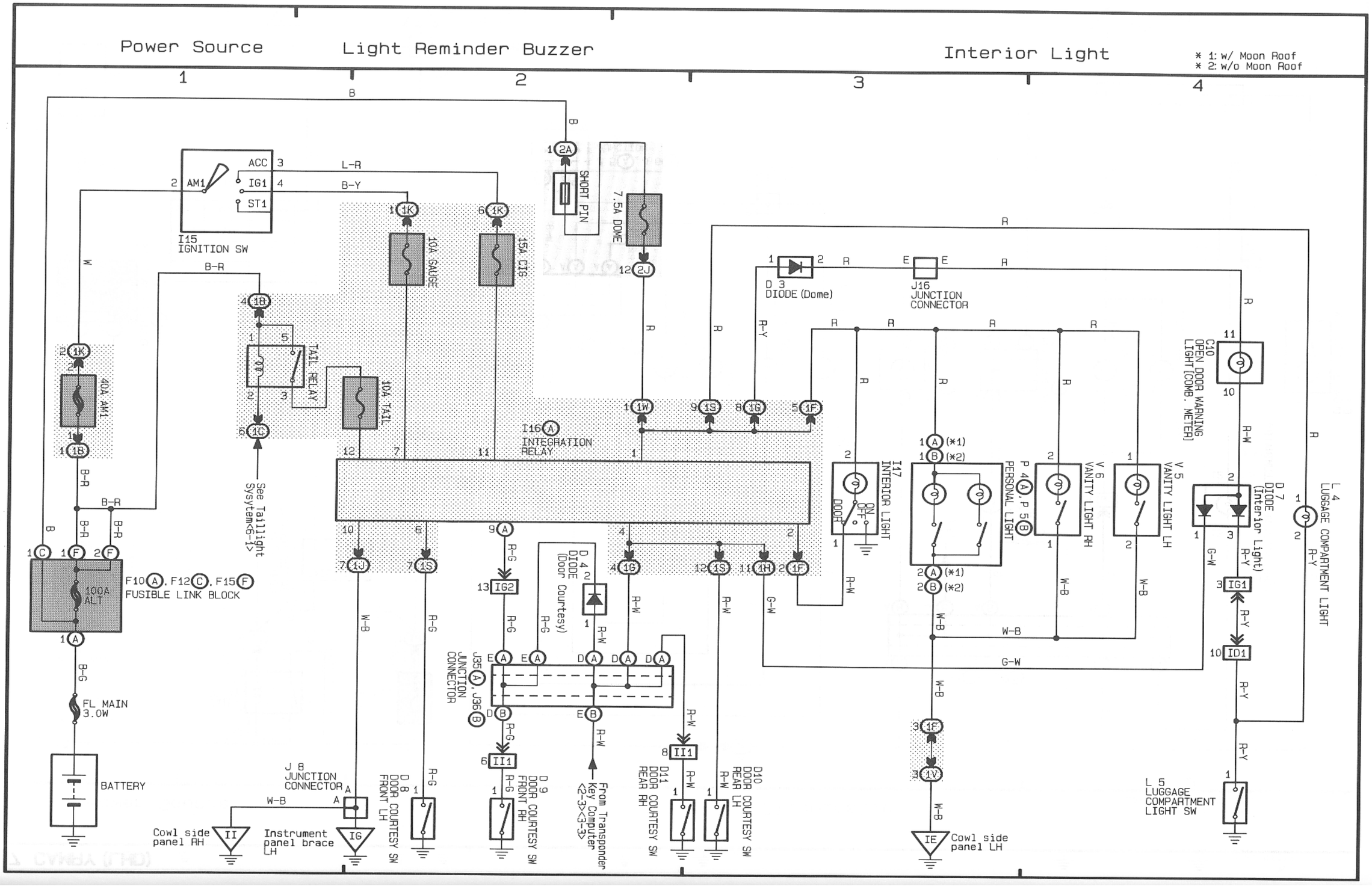
Power Source
Light Reminder Buzzer
Interior Light
* 1: w/ Moon Roof
* 2: w/o Moon Roof
1
2
3
4
I15 IGNITION SW
ACC
IG1
ST1
AM1
SHORT PIN
7.5A DOME
10A GAUGE
15A CIG
TAIL RELAY
10A TAIL
40A AM1
See Taillight System<6-1>
I16 INTEGRATION RELAY
F10, F12, F15
FUSIBLE LINK BLOCK
100A ALT
FL MAIN 3.0W
BATTERY
D 3 DIODE (Dome)
J16 JUNCTION CONNECTOR
C10 OPEN DOOR WARNING LIGHT (COMB. METER)
I17 INTERIOR LIGHT
DOOR
ON
OFF
P 4, P 5 PERSONAL LIGHT
V 6 VANITY LIGHT RH
V 5 VANITY LIGHT LH
D 7 DIODE (Interior Light)
L 4 LUGGAGE COMPARTMENT LIGHT
L 5 LUGGAGE COMPARTMENT LIGHT SW
D 4 DIODE (Door Courtesy)
J35, J36 JUNCTION CONNECTOR
J 8 JUNCTION CONNECTOR
D 8 DOOR COURTESY SW FRONT LH
D 9 DOOR COURTESY SW FRONT RH
D11 DOOR COURTESY SW REAR RH
D10 DOOR COURTESY SW REAR LH
From Transponder Key Computer <2-3><3-3>
Cowl side panel RH
Instrument panel brace LH
Cowl side panel LH

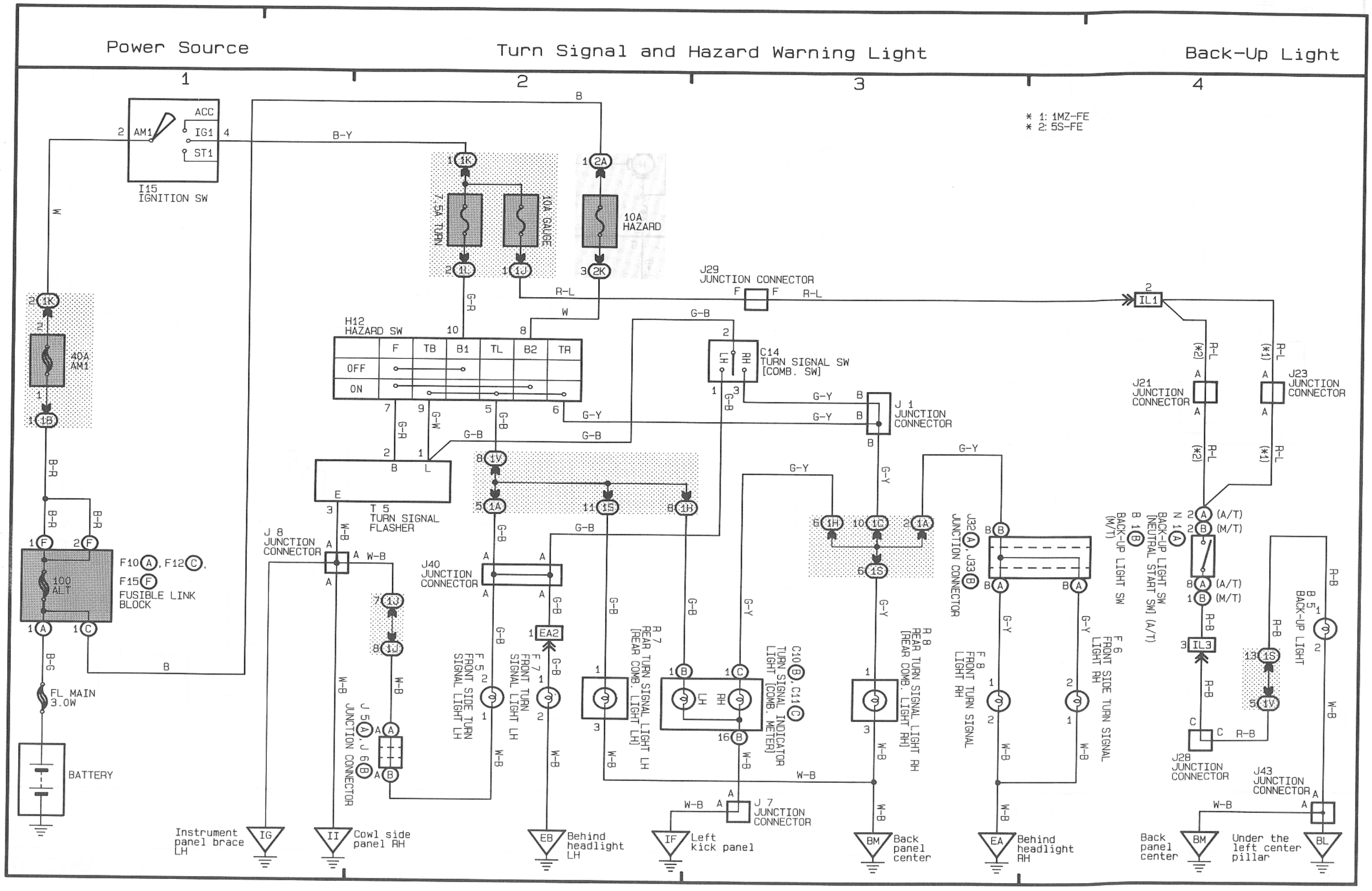
Power Source
Turn Signal and Hazard Warning Light
Back-Up Light
1
2
3
4
* 1: 1MZ-FE
* 2: 5S-FE
I15 IGNITION SW
ACC
IG1
ST1
AM1
40A AM1
100 ALT
F10 (A), F12 (C), F15 (F) FUSIBLE LINK BLOCK
FL MAIN 3.0W
BATTERY
7.5A TURN
10A GAUGE
10A HAZARD
J29 JUNCTION CONNECTOR
H12 HAZARD SW
OFF
ON
T 5 TURN SIGNAL FLASHER
J 8 JUNCTION CONNECTOR
J40 JUNCTION CONNECTOR
J 5 (A), J 6 (B) JUNCTION CONNECTOR
F 5 FRONT SIDE TURN SIGNAL LIGHT LH
F 7 FRONT TURN SIGNAL LIGHT LH
R 7 REAR TURN SIGNAL LIGHT LH [REAR COMB. LIGHT LH]
C10 (B), C11 (C) TURN SIGNAL INDICATOR LIGHT [COMB. METER]
C14 TURN SIGNAL SW [COMB. SW]
J 1 JUNCTION CONNECTOR
J 7 JUNCTION CONNECTOR
R 8 REAR TURN SIGNAL LIGHT RH [REAR COMB. LIGHT RH]
J32 (A), J33 (B) JUNCTION CONNECTOR
F 8 FRONT TURN SIGNAL LIGHT RH
F 6 FRONT SIDE TURN SIGNAL LIGHT RH
IL1
J21 JUNCTION CONNECTOR
J23 JUNCTION CONNECTOR
B 10 (B) BACK-UP LIGHT SW (M/T)
N 1 (A) BACK-UP LIGHT SW [NEUTRAL START SW] (A/T)
IL3
J28 JUNCTION CONNECTOR
B 5 BACK-UP LIGHT
J43 JUNCTION CONNECTOR
Instrument panel brace LH
Cowl side panel RH
Behind headlight LH
Left kick panel
Back panel center
Behind headlight RH
Back panel center
Under the left center pillar

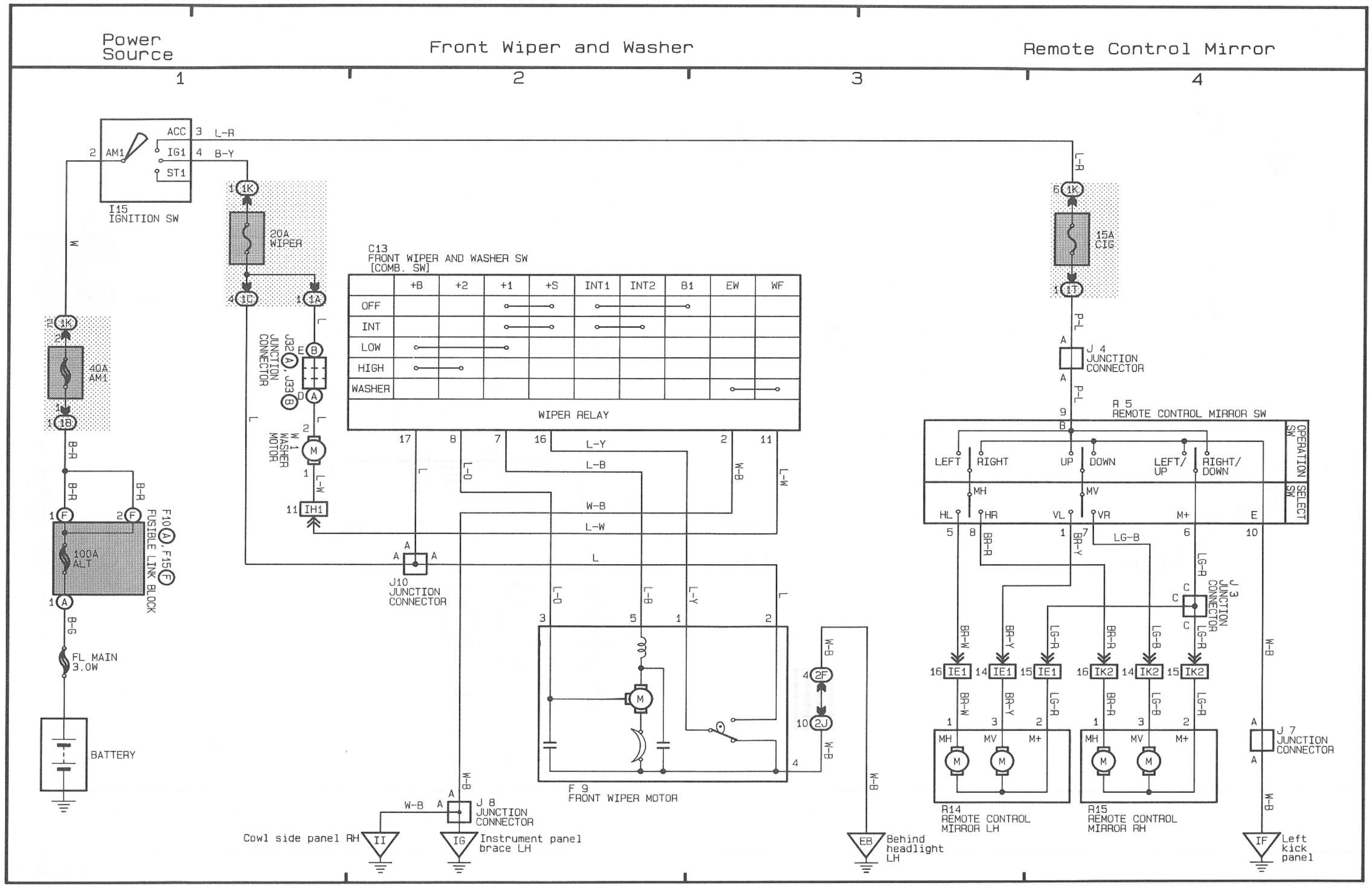
Power Source
Front Wiper and Washer
Remote Control Mirror
1
2
3
4
I15 IGNITION SW
ACC
IG1
ST1
AM1
L-R
B-Y
20A WIPER
40A AM1
100A ALT
F10, F15 FUSIBLE LINK BLOCK
FL MAIN 3.0W
BATTERY
C13 FRONT WIPER AND WASHER SW [COMB. SW]
+B
+2
+1
+S
INT1
INT2
B1
EW
WF
OFF
INT
LOW
HIGH
WASHER
WIPER RELAY
J32, J33 JUNCTION CONNECTOR
W1 WASHER MOTOR
IH1
J10 JUNCTION CONNECTOR
F 9 FRONT WIPER MOTOR
J 8 JUNCTION CONNECTOR
Cowl side panel RH
Instrument panel brace LH
15A CIG
J 4 JUNCTION CONNECTOR
R 5 REMOTE CONTROL MIRROR SW
OPERATION SW
SELECT SW
LEFT
RIGHT
UP
DOWN
LEFT/ UP
RIGHT/ DOWN
J 3 JUNCTION CONNECTOR
R14 REMOTE CONTROL MIRROR LH
R15 REMOTE CONTROL MIRROR RH
J 7 JUNCTION CONNECTOR
Behind headlight LH
Left kick panel

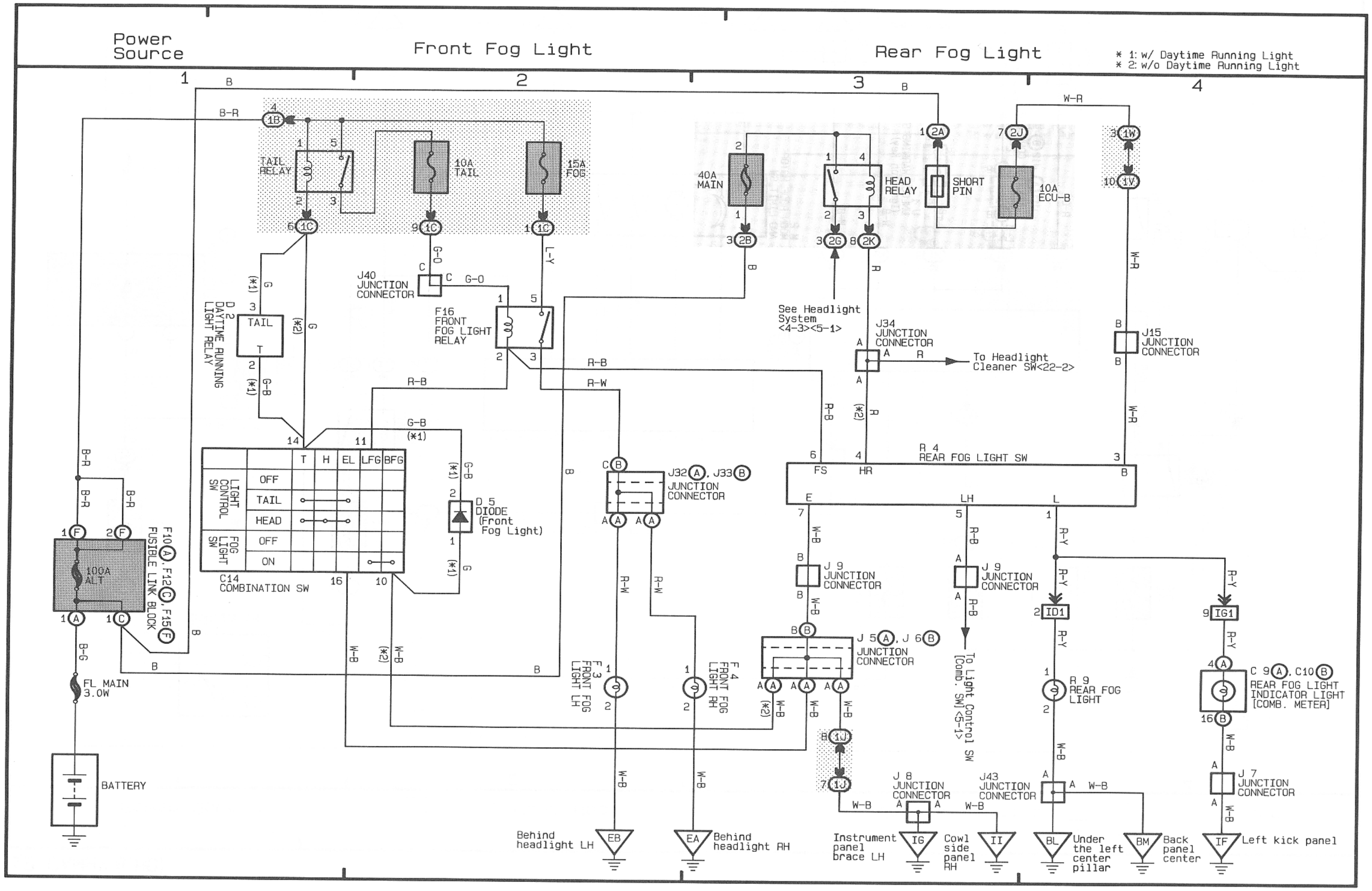
Power Source
Front Fog Light
Rear Fog Light
* 1: w/ Daytime Running Light
* 2: w/o Daytime Running Light
TAIL RELAY
10A TAIL
15A FOG
40A MAIN
HEAD RELAY
SHORT PIN
10A ECU-B
J40 JUNCTION CONNECTOR
F16 FRONT FOG LIGHT RELAY
D 2 DAYTIME RUNNING LIGHT RELAY
See Headlight System <4-3><5-1>
J34 JUNCTION CONNECTOR
To Headlight Cleaner SW<22-2>
J15 JUNCTION CONNECTOR
R 4 REAR FOG LIGHT SW
C14 COMBINATION SW
LIGHT CONTROL SW
FOG LIGHT SW
OFF
TAIL
HEAD
ON
D 5 DIODE (Front Fog Light)
J32 (A), J33 (B) JUNCTION CONNECTOR
J 9 JUNCTION CONNECTOR
J 5 (A), J 6 (B) JUNCTION CONNECTOR
To Light Control SW [Comb. SW] <5-1>
R 9 REAR FOG LIGHT
C 9 (A), C10 (B) REAR FOG LIGHT INDICATOR LIGHT [COMB. METER]
J 7 JUNCTION CONNECTOR
J 8 JUNCTION CONNECTOR
J43 JUNCTION CONNECTOR
F10 (A), F12 (C), F15 (F) FUSIBLE LINK BLOCK
100A ALT
FL MAIN 3.0W
BATTERY
F 3 FRONT FOG LIGHT LH
F 4 FRONT FOG LIGHT RH
Behind headlight LH
Behind headlight RH
Instrument panel brace LH
Cowl side panel RH
Under the left center pillar
Back panel center
Left kick panel

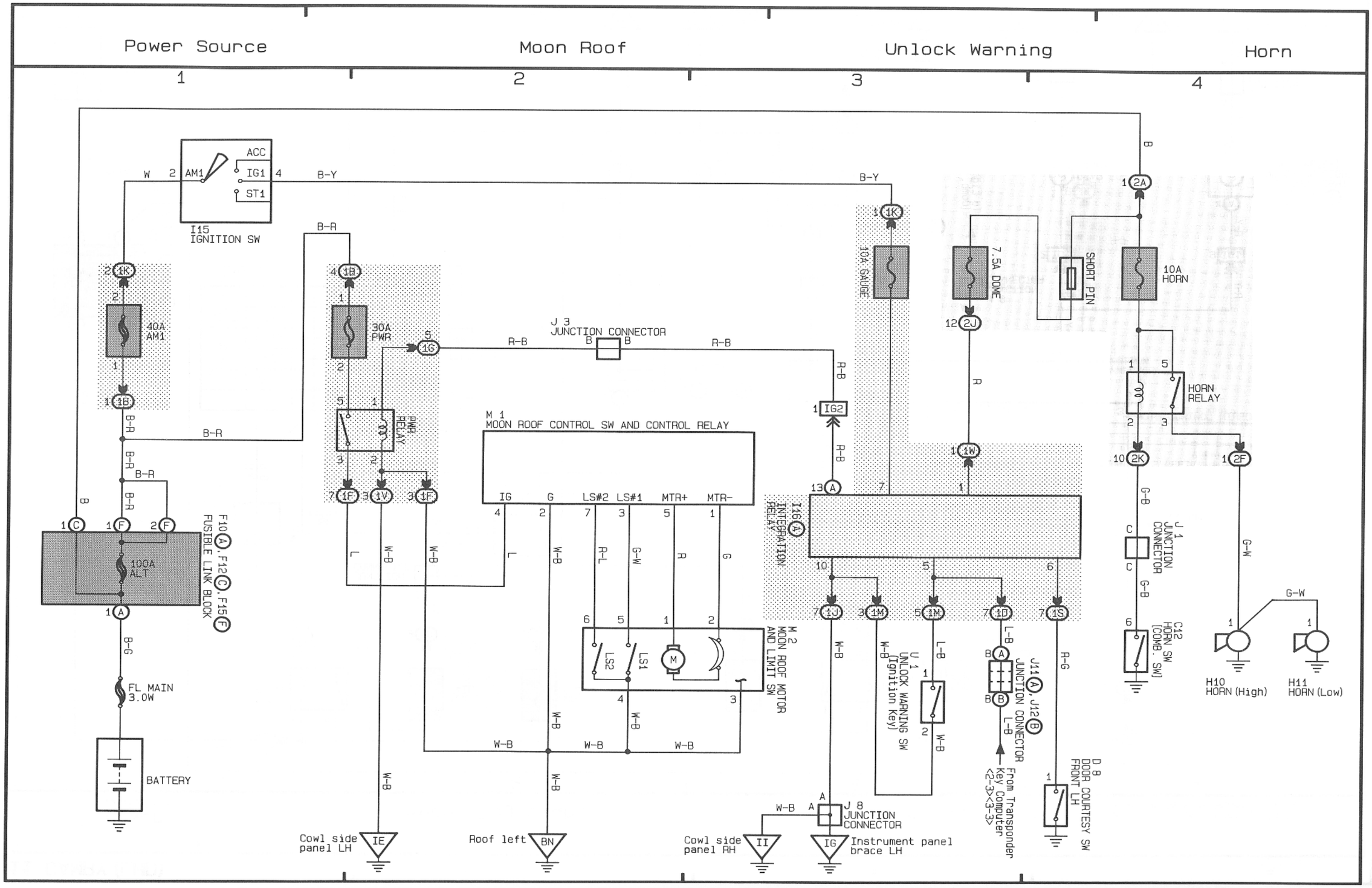

K OVERALL ELECTRICAL WIRING DIAGRAM

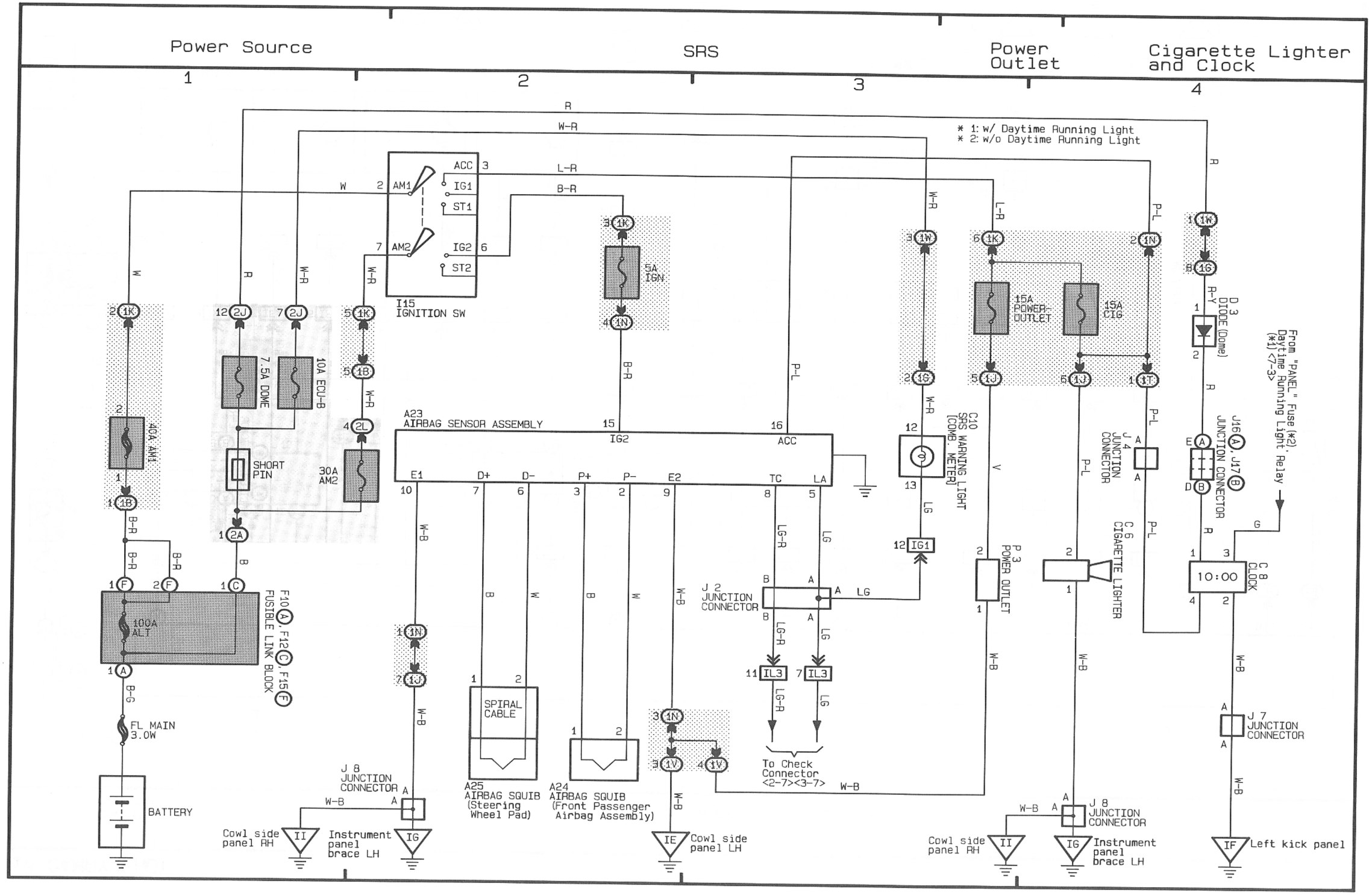
Power Source
SRS
Power Outlet
Cigarette Lighter and Clock
1
2
3
4
* 1: w/ Daytime Running Light
* 2: w/o Daytime Running Light
I15 IGNITION SW
ACC
IG1
ST1
AM1
AM2
IG2
ST2
5A IGN
15A POWER-OUTLET
15A CIG
D 3 DIODE (Dome)
From "PANEL" Fuse (*2), Daytime Running Light Relay (*1) <7-3>
40A AM1
7.5A DOME
10A ECU-B
SHORT PIN
30A AM2
A23 AIRBAG SENSOR ASSEMBLY
IG2
ACC
E1
D+
D-
P+
P-
E2
TC
LA
C10 SRS WARNING LIGHT [COMB. METER]
J 4 JUNCTION CONNECTOR
J16, J17 JUNCTION CONNECTOR
C 6 CIGARETTE LIGHTER
C 8 CLOCK
10:00
P 3 POWER OUTLET
J 2 JUNCTION CONNECTOR
100A ALT
F10, F12, F15 FUSIBLE LINK BLOCK
FL MAIN 3.0W
BATTERY
J 8 JUNCTION CONNECTOR
SPIRAL CABLE
A25 AIRBAG SQUIB (Steering Wheel Pad)
A24 AIRBAG SQUIB (Front Passenger Airbag Assembly)
To Check Connector <2-7><3-7>
J 7 JUNCTION CONNECTOR
Cowl side panel RH
Instrument panel brace LH
Cowl side panel LH
Left kick panel

14 CAMRY (LHD)

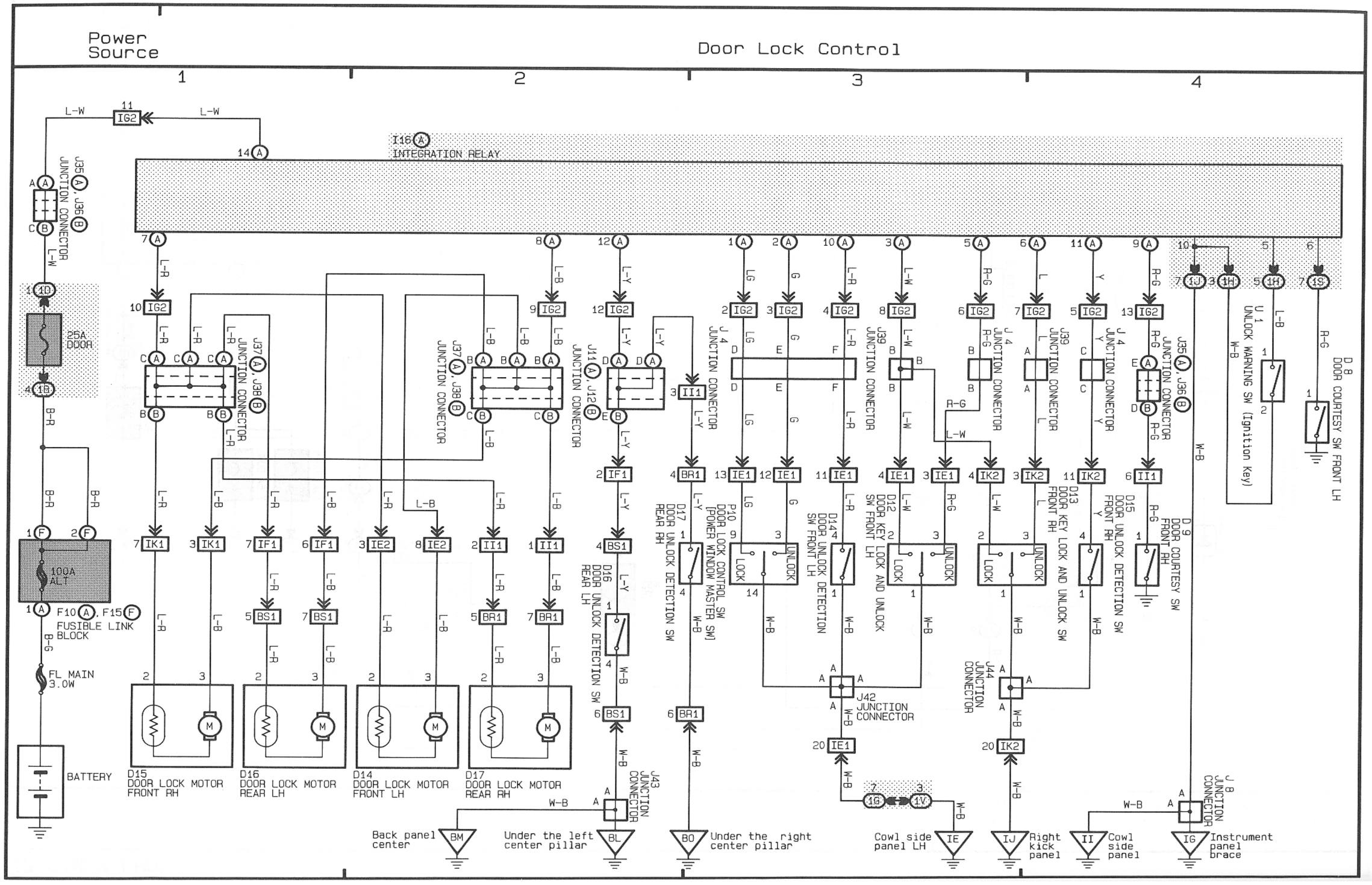
Power Source
Door Lock Control
1
2
3
4
I16 INTEGRATION RELAY
J35, J36 JUNCTION CONNECTOR
25A DOOR
100A ALT
F10, F15 FUSIBLE LINK BLOCK
FL MAIN 3.0W
BATTERY
D15 DOOR LOCK MOTOR FRONT RH
D16 DOOR LOCK MOTOR REAR LH
D14 DOOR LOCK MOTOR FRONT LH
D17 DOOR LOCK MOTOR REAR RH
J37, J38 JUNCTION CONNECTOR
J11, J12 JUNCTION CONNECTOR
J4 JUNCTION CONNECTOR
J39 JUNCTION CONNECTOR
D16 DOOR UNLOCK DETECTION SW REAR LH
D17 DOOR UNLOCK DETECTION SW REAR RH
P10 DOOR LOCK CONTROL SW [POWER WINDOW MASTER SW]
D14 DOOR UNLOCK DETECTION SW FRONT LH
D12 DOOR KEY LOCK AND UNLOCK SW FRONT LH
D13 DOOR KEY LOCK AND UNLOCK SW FRONT RH
D15 DOOR UNLOCK DETECTION SW FRONT RH
D9 DOOR COURTESY SW FRONT RH
D8 DOOR COURTESY SW FRONT LH
U1 UNLOCK WARNING SW (Ignition Key)
J42 JUNCTION CONNECTOR
J44 JUNCTION CONNECTOR
J43 JUNCTION CONNECTOR
J8 JUNCTION CONNECTOR
LOCK
UNLOCK
Back panel center
Under the left center pillar
Under the right center pillar
Cowl side panel LH
Right kick panel
Cowl side panel
Instrument panel brace

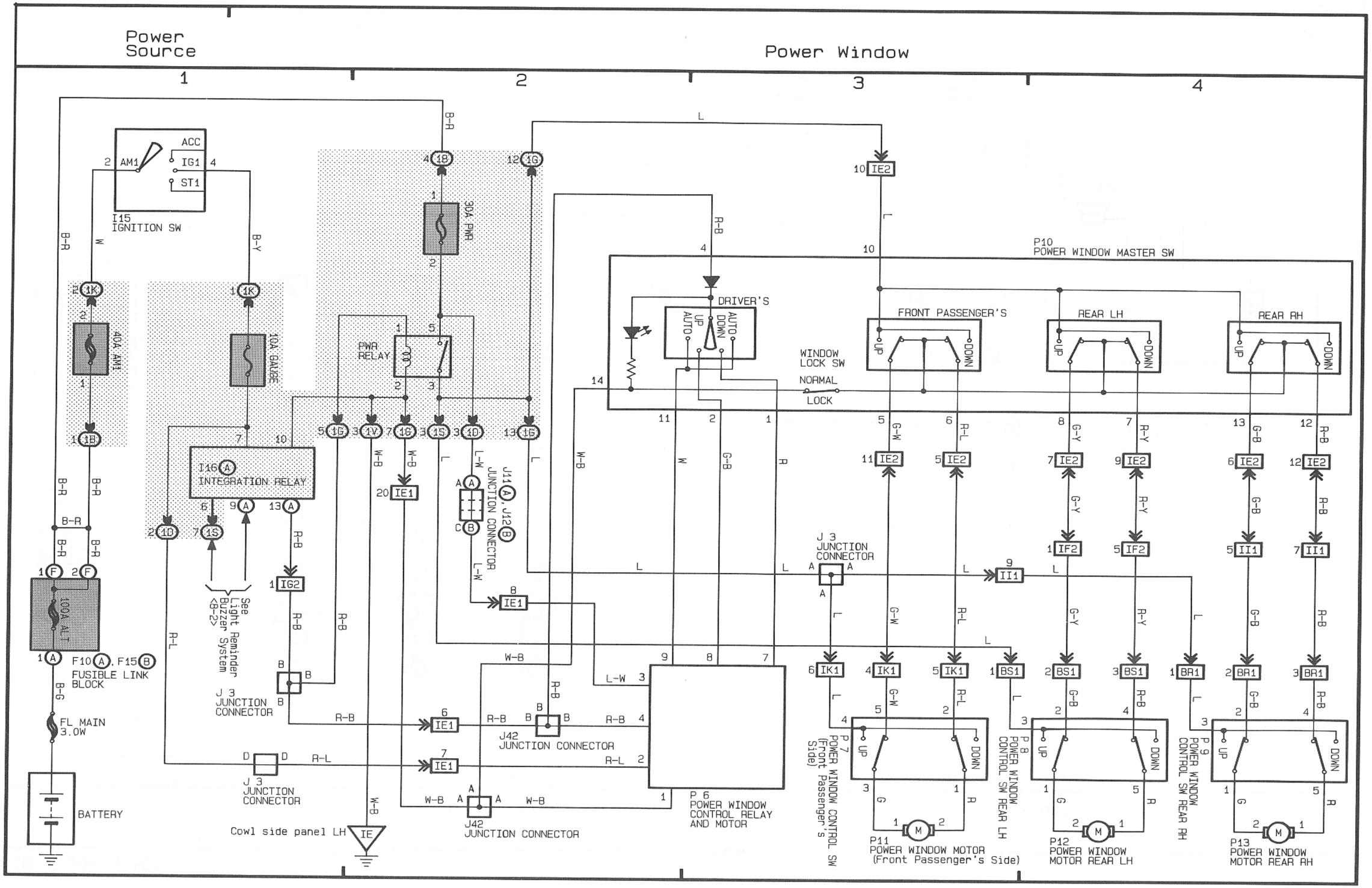
Power Source
Power Window
1
2
3
4
I15
IGNITION SW
ACC
IG1
ST1
AM1
40A AM1
10A GAUGE
30A PWR
PWR RELAY
I16
INTEGRATION RELAY
J11, J12
JUNCTION CONNECTOR
See Light Reminder Buzzer System <B-2>
100A ALT
F10, F15
FUSIBLE LINK BLOCK
FL MAIN 3.0W
BATTERY
J 3
JUNCTION CONNECTOR
J42
JUNCTION CONNECTOR
Cowl side panel LH
P10
POWER WINDOW MASTER SW
DRIVER'S
FRONT PASSENGER'S
REAR LH
REAR RH
WINDOW LOCK SW
NORMAL
LOCK
P 6
POWER WINDOW CONTROL RELAY AND MOTOR
P 7
POWER WINDOW CONTROL SW (Front Passenger's Side)
P 8
POWER WINDOW CONTROL SW REAR LH
P 9
POWER WINDOW CONTROL SW REAR RH
P11
POWER WINDOW MOTOR (Front Passenger's Side)
P12
POWER WINDOW MOTOR REAR LH
P13
POWER WINDOW MOTOR REAR RH

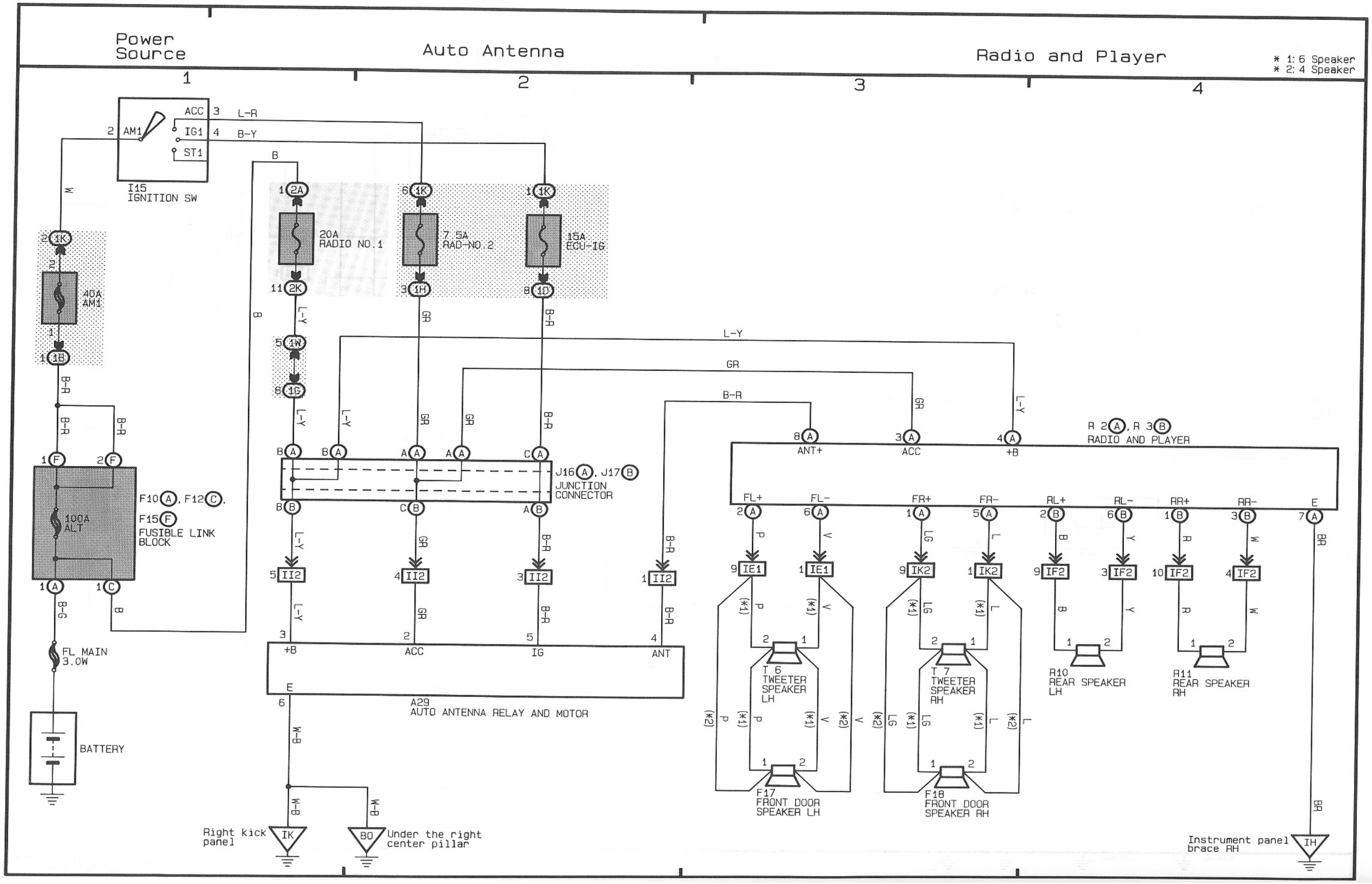
Power Source
Auto Antenna
Radio and Player
* 1: 6 Speaker
* 2: 4 Speaker
1
2
3
4
ACC
IG1
ST1
AM1
I15
IGNITION SW
40A
AM1
20A
RADIO NO.1
7.5A
RAD-NO.2
15A
ECU-IG
100A
ALT
F10 A, F12 C,
F15 F
FUSIBLE LINK BLOCK
FL MAIN
3.0W
BATTERY
J16 A, J17 B
JUNCTION CONNECTOR
A29
AUTO ANTENNA RELAY AND MOTOR
+B
ACC
IG
ANT
ANT+
+B
R 2 A, R 3 B
RADIO AND PLAYER
FL+
FL-
FR+
FR-
RL+
RL-
RR+
RR-
E
T 6
TWEETER SPEAKER LH
T 7
TWEETER SPEAKER RH
F17
FRONT DOOR SPEAKER LH
F18
FRONT DOOR SPEAKER RH
R10
REAR SPEAKER LH
R11
REAR SPEAKER RH
Right kick panel
IK
B0
Under the right center pillar
Instrument panel brace RH
IH

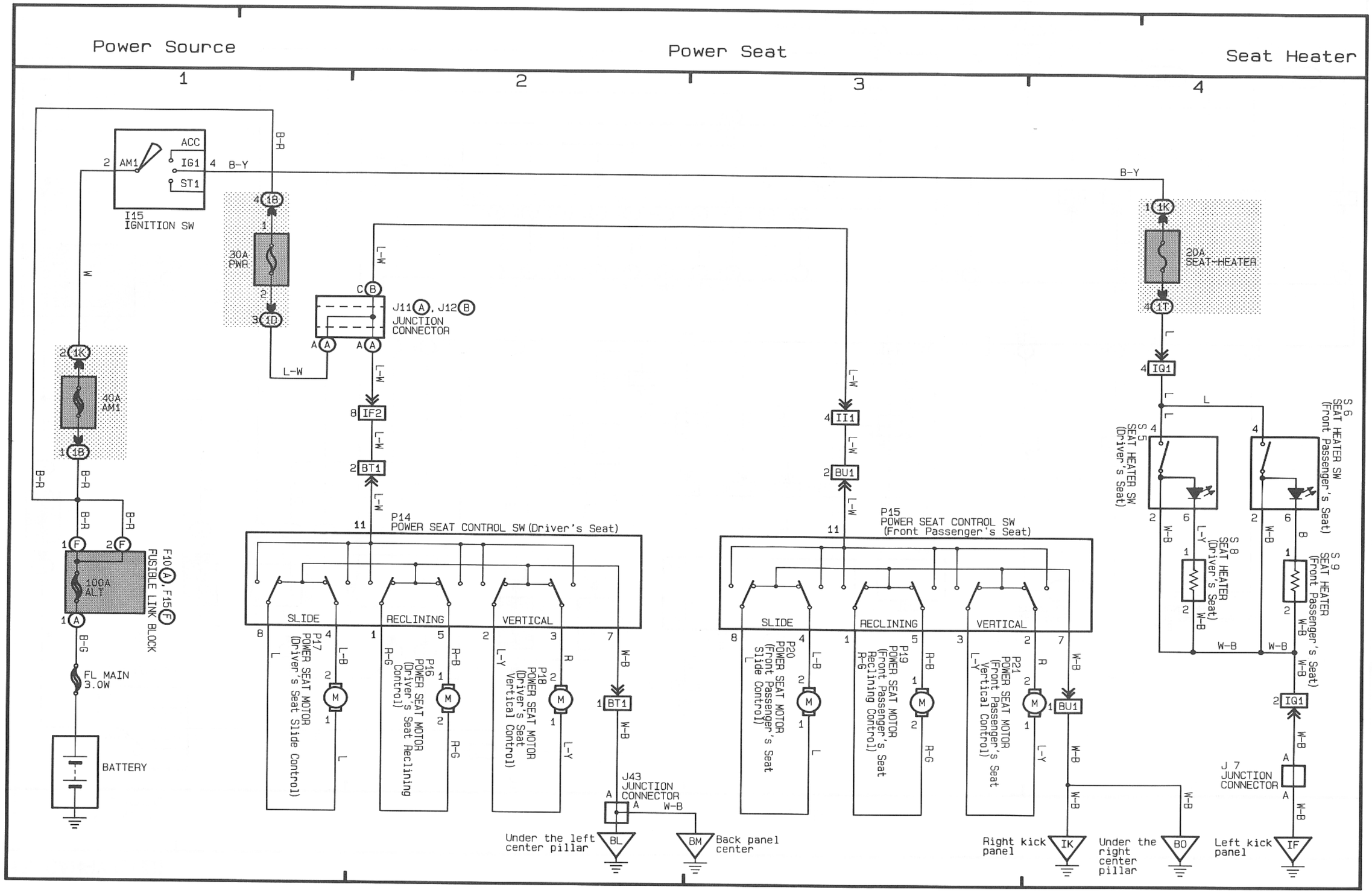
Power Source
Power Seat
Seat Heater
1
2
3
4
I15
IGNITION SW
ACC
IG1
ST1
AM1
B-Y
B-R
30A
PWR
40A
AM1
100A
ALT
F10, F15
FUSIBLE LINK BLOCK
FL MAIN
3.0W
BATTERY
J11, J12
JUNCTION
CONNECTOR
IF2
BT1
P14
POWER SEAT CONTROL SW (Driver's Seat)
SLIDE
RECLINING
VERTICAL
P47
POWER SEAT MOTOR
(Driver's Seat Slide Control)
P16
POWER SEAT MOTOR
(Driver's Seat Reclining Control)
P18
POWER SEAT MOTOR
(Driver's Seat Vertical Control)
J43
JUNCTION
CONNECTOR
Under the left
center pillar
BL
BM
Back panel
center
II1
BU1
P15
POWER SEAT CONTROL SW
(Front Passenger's Seat)
P20
POWER SEAT MOTOR
(Front Passenger's Seat Slide Control)
P19
POWER SEAT MOTOR
(Front Passenger's Seat Reclining Control)
P21
POWER SEAT MOTOR
(Front Passenger's Seat Vertical Control)
Right kick
panel
IK
Under the
right
center
pillar
BO
20A
SEAT-HEATER
IG1
S 5
SEAT HEATER SW
(Driver's Seat)
S 6
SEAT HEATER SW
(Front Passenger's Seat)
S 8
SEAT HEATER
(Driver's Seat)
S 9
SEAT HEATER
(Front Passenger's Seat)
J 7
JUNCTION
CONNECTOR
Left kick
panel
IF

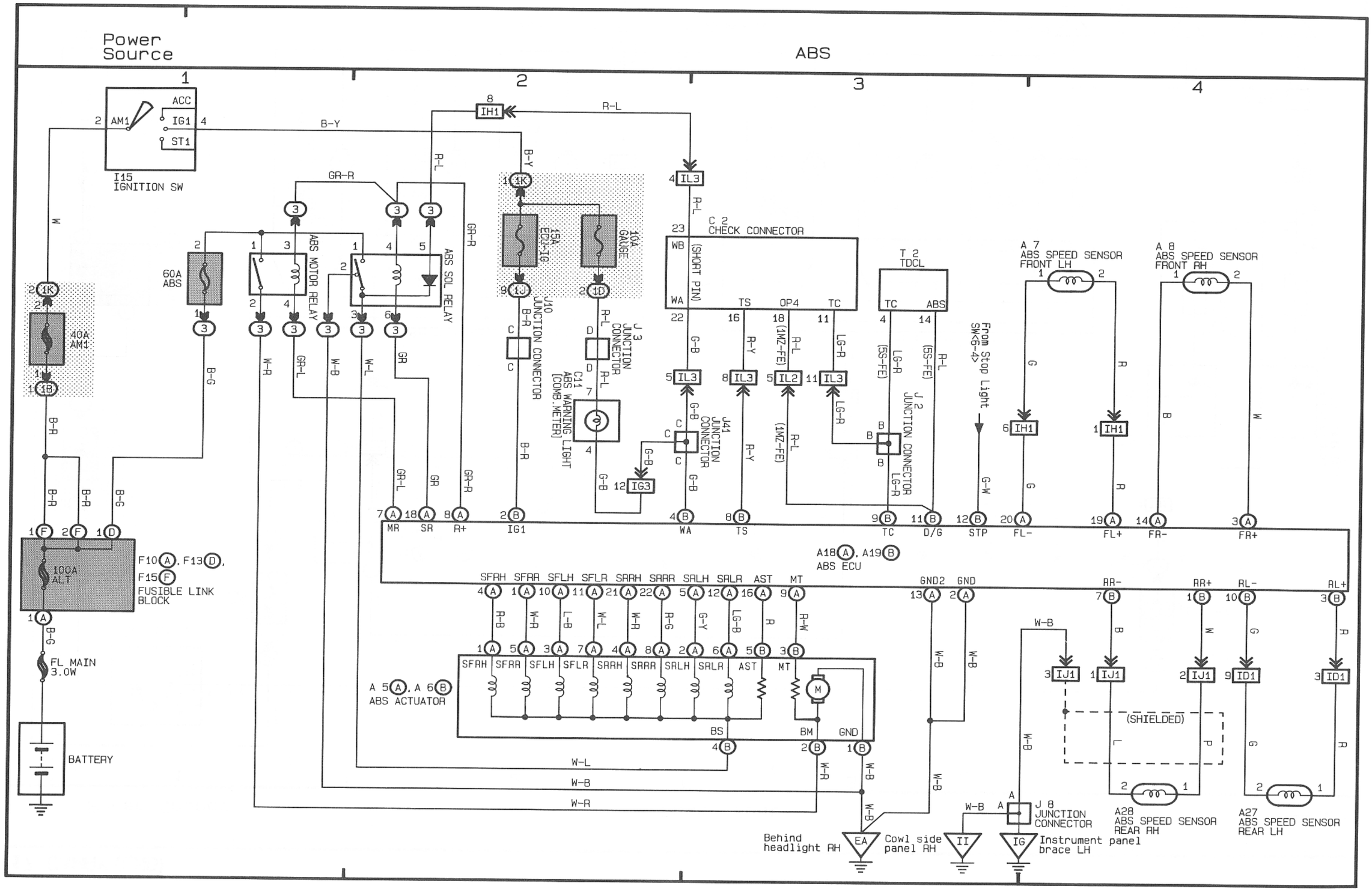
Power Source
ABS
1
2
3
4
I15 IGNITION SW
ACC
IG1
ST1
AM1
B-Y
R-L
IH1
GR-R
60A ABS
ABS MOTOR RELAY
ABS SOL RELAY
15A ECU-IG
10A GAUGE
40A AM1
J10 JUNCTION CONNECTOR
J 3 JUNCTION CONNECTOR
C11 ABS WARNING LIGHT [COMB.METER]
C 2 CHECK CONNECTOR
(SHORT PIN)
WB
WA
TS
OP4
TC
IL3
IL2
IG3
J41 JUNCTION CONNECTOR
T 2 TDCL
ABS
(5S-FE)
(1MZ-FE)
J 2 JUNCTION CONNECTOR
From Stop Light SW<6-4>
A 7 ABS SPEED SENSOR FRONT LH
A 8 ABS SPEED SENSOR FRONT RH
IH1
F10 (A), F13 (D), F15 (F)
FUSIBLE LINK BLOCK
100A ALT
FL MAIN 3.0W
BATTERY
MR
SR
R+
IG1
WA
TS
TC
D/G
STP
FL-
FL+
FR-
FR+
A18 (A), A19 (B)
ABS ECU
SFRH
SFRR
SFLH
SFLR
SRRH
SRRR
SRLH
SRLR
AST
MT
GND2
GND
RR-
RR+
RL-
RL+
A 5 (A), A 6 (B)
ABS ACTUATOR
BS
BM
M
IJ1
ID1
(SHIELDED)
A28 ABS SPEED SENSOR REAR RH
A27 ABS SPEED SENSOR REAR LH
J 8 JUNCTION CONNECTOR
Behind headlight RH
EA
Cowl side panel RH
II
IG
Instrument panel brace LH
W-L
W-B
W-R

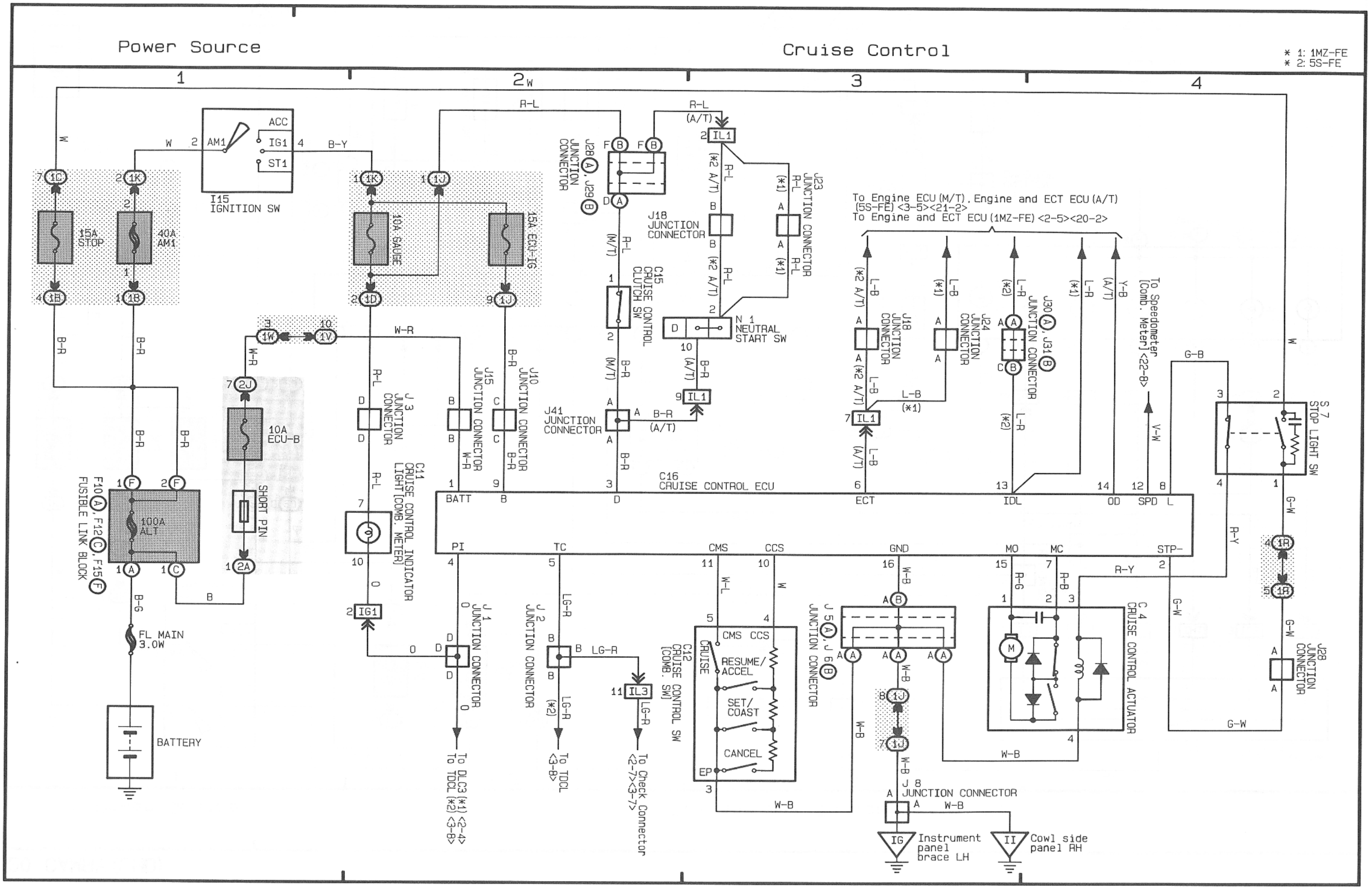
Power Source
Cruise Control
* 1: 1MZ-FE
* 2: 5S-FE
I15 IGNITION SW
ACC
IG1
ST1
AM1
15A STOP
40A AM1
10A GAUGE
15A ECU-IG
10A ECU-B
SHORT PIN
100A ALT
F10, F12, F15 FUSIBLE LINK BLOCK
FL MAIN 3.0W
BATTERY
J28, J29 JUNCTION CONNECTOR
J18 JUNCTION CONNECTOR
J23 JUNCTION CONNECTOR
C15 CRUISE CONTROL CLUTCH SW
N 1 NEUTRAL START SW
J41 JUNCTION CONNECTOR
J 3 JUNCTION CONNECTOR
J15 JUNCTION CONNECTOR
J10 JUNCTION CONNECTOR
C11 CRUISE CONTROL INDICATOR LIGHT [COMB. METER]
C16 CRUISE CONTROL ECU
To Engine ECU (M/T), Engine and ECT ECU (A/T) (5S-FE) <3-5><21-2>
To Engine and ECT ECU (1MZ-FE) <2-5><20-2>
J24 JUNCTION CONNECTOR
J30, J31 JUNCTION CONNECTOR
To Speedometer [Comb. Meter] <22-8>
S 7 STOP LIGHT SW
J 1 JUNCTION CONNECTOR
To DLC3 (*1) <2-4>
To TDCL (*2) <3-8>
J 2 JUNCTION CONNECTOR
To TDCL <3-8>
To Check Connector <2-7><3-7>
C12 CRUISE CONTROL SW [COMB. SW]
CRUISE
RESUME/ ACCEL
SET/ COAST
CANCEL
J 5, J 6 JUNCTION CONNECTOR
C 4 CRUISE CONTROL ACTUATOR
J 8 JUNCTION CONNECTOR
Instrument panel brace LH
Cowl side panel RH
BATT
PI
TC
CMS
CCS
GND
MO
MC
STP-
ECT
IDL
OD
SPD
EP

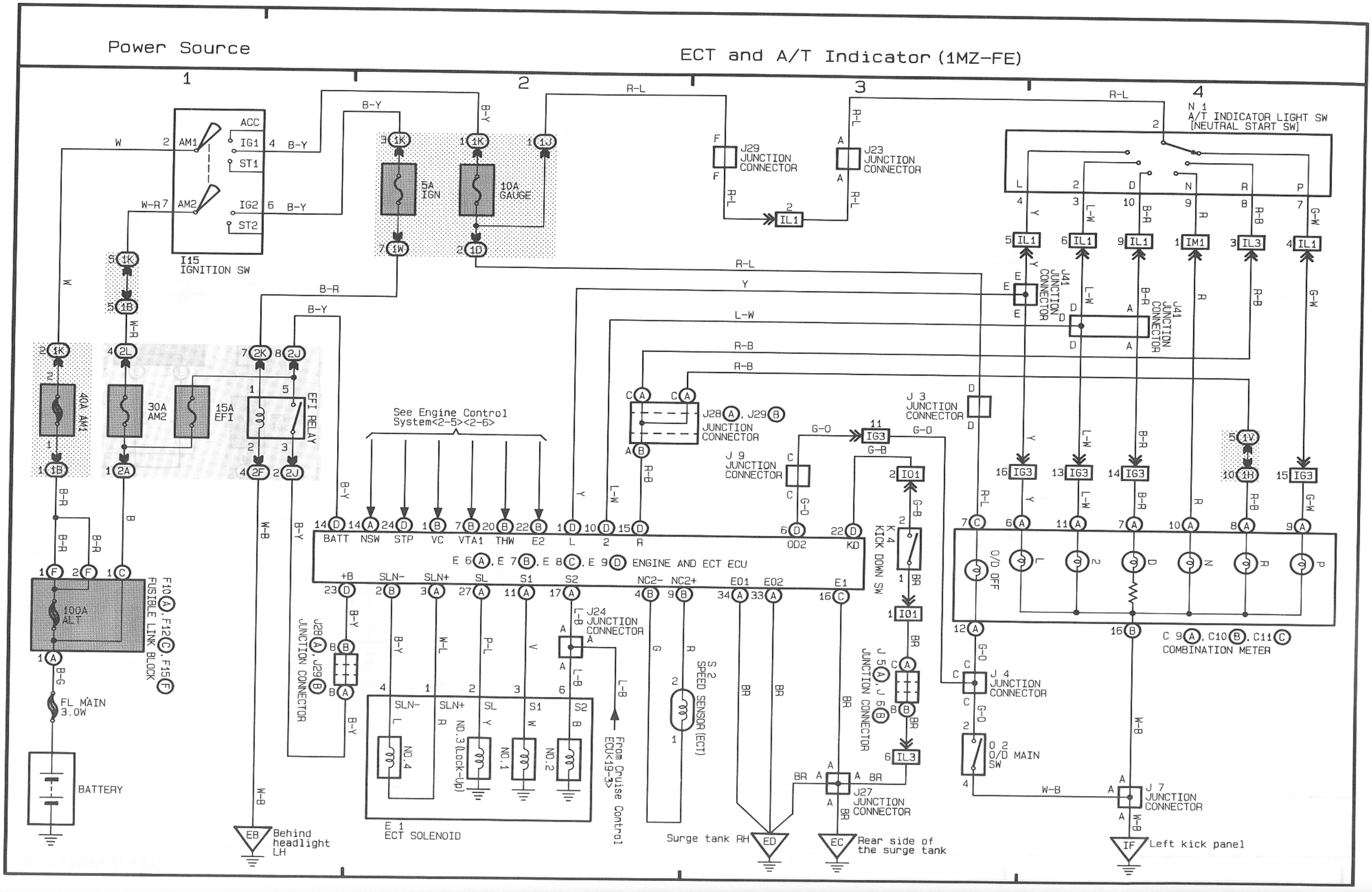
Power Source
ECT and A/T Indicator (1MZ-FE)
1
2
3
4
I15
IGNITION SW
ACC
IG1
ST1
IG2
ST2
AM1
AM2
5A
IGN
10A
GAUGE
J29
JUNCTION
CONNECTOR
J23
JUNCTION
CONNECTOR
N 1
A/T INDICATOR LIGHT SW
(NEUTRAL START SW)
J41
JUNCTION
CONNECTOR
40A AM1
30A
AM2
15A
EFI
EFI RELAY
See Engine Control
System<2-5><2-6>
J28, J29
JUNCTION
CONNECTOR
J 3
JUNCTION
CONNECTOR
J 9
JUNCTION
CONNECTOR
K 4
KICK DOWN SW
O/D OFF
BATT
NSW
STP
VC
VTA1
THW
E2
L
2
R
OD2
KD
E 6, E 7, E 8, E 9 ENGINE AND ECT ECU
+B
SLN-
SLN+
SL
S1
S2
NC2-
NC2+
E01
E02
E1
J24
JUNCTION
CONNECTOR
S 2
SPEED SENSOR (ECT)
J 5, J 6
JUNCTION CONNECTOR
J 4
JUNCTION
CONNECTOR
O 2
O/D MAIN
SW
C 9, C10, C11
COMBINATION METER
J 7
JUNCTION
CONNECTOR
J27
JUNCTION
CONNECTOR
NO.4
NO.3 (Lock-Up)
NO.1
NO.2
From Cruise Control
ECU<19-3>
E 1
ECT SOLENOID
100A
ALT
F10, F12, F15
FUSIBLE LINK BLOCK
FL MAIN
3.0W
BATTERY
EB
Behind
headlight
LH
Surge tank RH
ED
EC
Rear side of
the surge tank
IF
Left kick panel

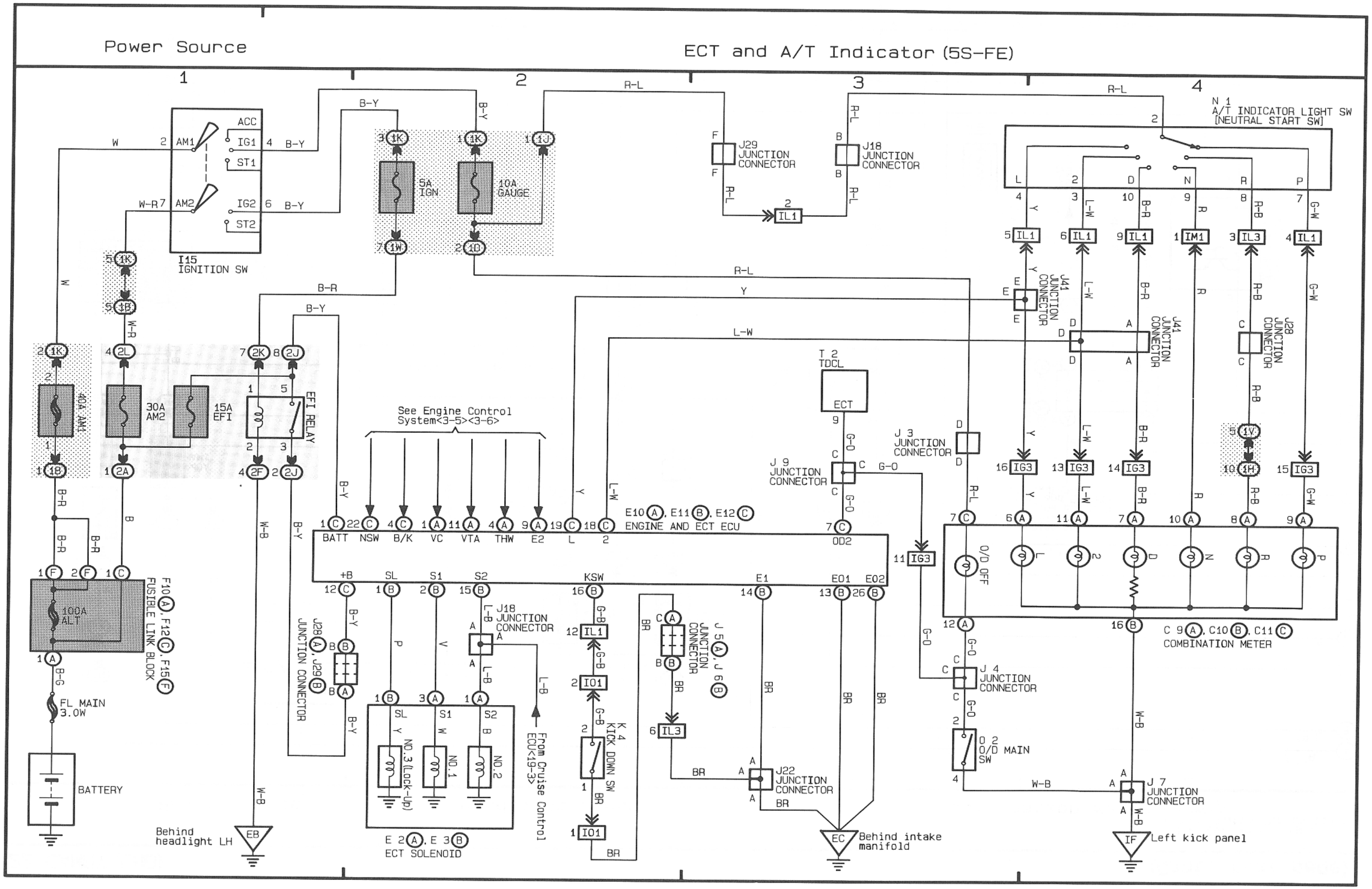
Power Source
ECT and A/T Indicator (5S-FE)
1
2
3
4
I15 IGNITION SW
ACC
IG1
ST1
IG2
ST2
AM1
AM2
5A IGN
10A GAUGE
J29 JUNCTION CONNECTOR
J18 JUNCTION CONNECTOR
N 1 A/T INDICATOR LIGHT SW [NEUTRAL START SW]
J41 JUNCTION CONNECTOR
J28 JUNCTION CONNECTOR
T 2 TDCL
ECT
J 3 JUNCTION CONNECTOR
J 9 JUNCTION CONNECTOR
See Engine Control System<3-5><3-6>
E10 (A), E11 (B), E12 (C) ENGINE AND ECT ECU
BATT NSW B/K VC VTA THW E2 L 2
OD2
O/D OFF
C 9 (A), C10 (B), C11 (C) COMBINATION METER
J 4 JUNCTION CONNECTOR
D 2 O/D MAIN SW
J 7 JUNCTION CONNECTOR
40A AM1
30A AM2
15A EFI
EFI RELAY
F10 (A), F12 (C), F15 (F) FUSIBLE LINK BLOCK
100A ALT
FL MAIN 3.0W
BATTERY
Behind headlight LH
EB
J28 (A), J29 (B) JUNCTION CONNECTOR
J18 JUNCTION CONNECTOR
NO.3 (Lock-Up)
NO.1
NO.2
E 2 (A), E 3 (B) ECT SOLENOID
From Cruise Control ECU<19-3>
K 4 KICK DOWN SW
J 5 (A), J 6 (B) JUNCTION CONNECTOR
J22 JUNCTION CONNECTOR
EC
Behind intake manifold
IF
Left kick panel

(Cont. next page)

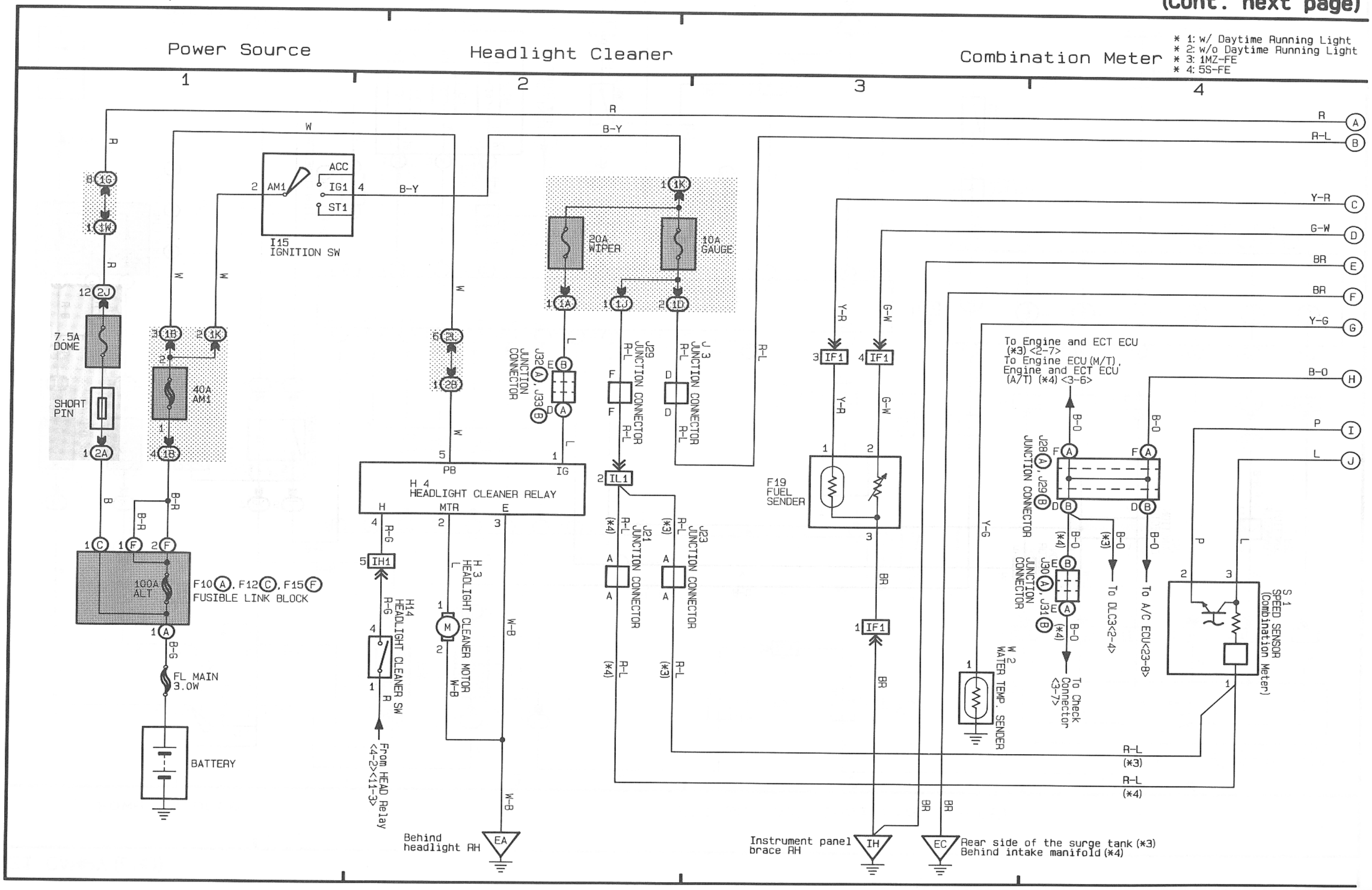

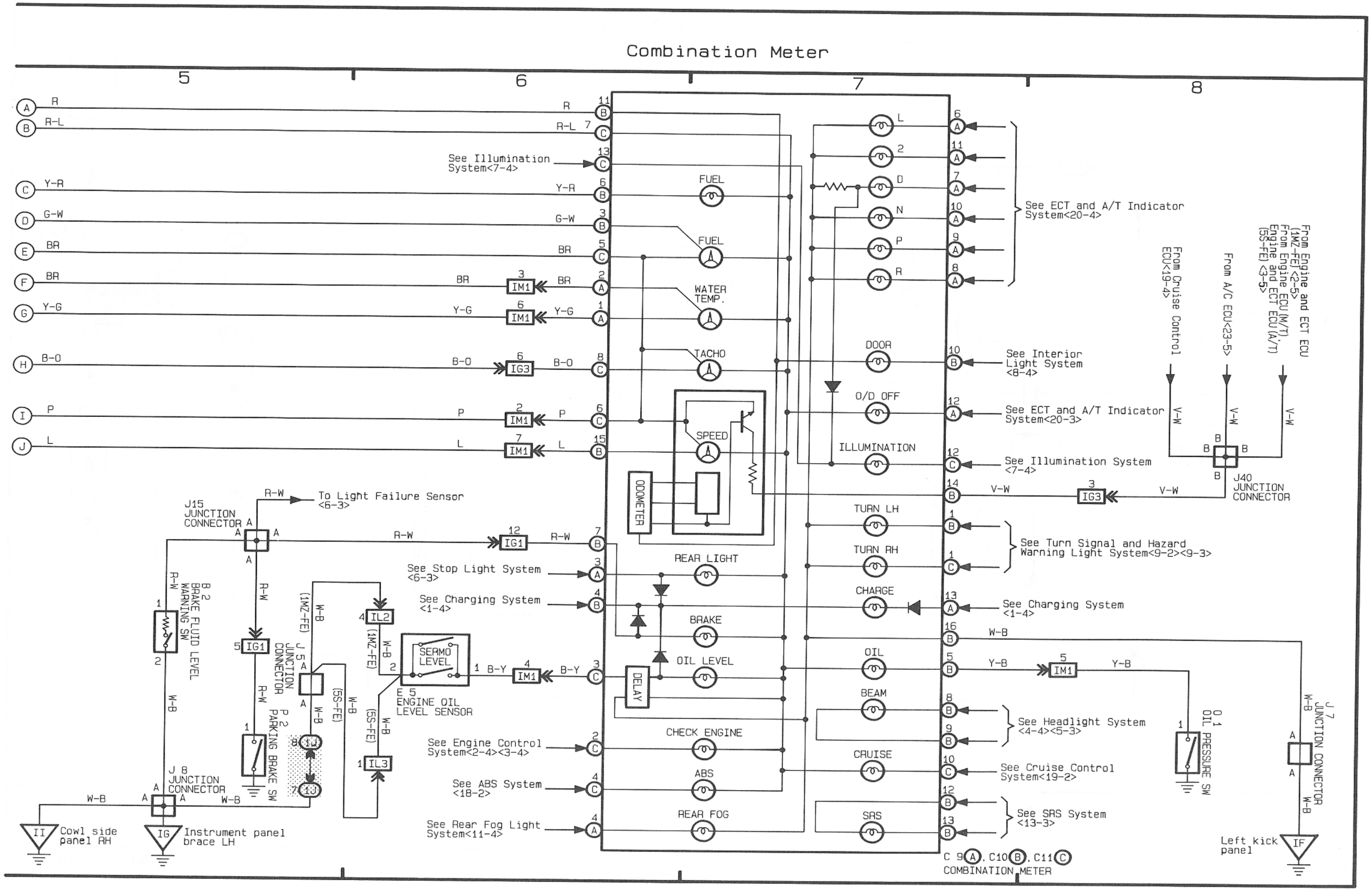
Combination Meter
5
6
7
8
See Illumination System<7-4>
FUEL
FUEL
WATER TEMP.
TACHO
SPEED
ODOMETER
REAR LIGHT
BRAKE
OIL LEVEL
DELAY
CHECK ENGINE
ABS
REAR FOG
DOOR
O/D OFF
ILLUMINATION
TURN LH
TURN RH
CHARGE
OIL
BEAM
CRUISE
SRS
See ECT and A/T Indicator System<20-4>
See Interior Light System <8-4>
See ECT and A/T Indicator System<20-3>
See Illumination System <7-4>
See Turn Signal and Hazard Warning Light System<9-2><9-3>
See Charging System <1-4>
See Headlight System <4-4><5-3>
See Cruise Control System<19-2>
See SRS System <13-3>
From Cruise Control ECU<19-4>
From A/C ECU<23-5>
From Engine and ECT ECU (1MZ-FE) <2-5>
From Engine ECU (M/T), Engine and ECT ECU (A/T) (5S-FE) <3-5>
J40 JUNCTION CONNECTOR
To Light Failure Sensor <6-3>
J15 JUNCTION CONNECTOR
See Stop Light System <6-3>
See Charging System <1-4>
See Engine Control System<2-4><3-4>
See ABS System <18-2>
See Rear Fog Light System<11-4>
B 2 BRAKE FLUID LEVEL WARNING SW
J 5 JUNCTION CONNECTOR
P 2 PARKING BRAKE SW
SERMO LEVEL
E 5 ENGINE OIL LEVEL SENSOR
J 8 JUNCTION CONNECTOR
Cowl side panel RH
Instrument panel brace LH
O 1 OIL PRESSURE SW
J 7 JUNCTION CONNECTOR
Left kick panel
C 9 A, C10 B, C11 C
COMBINATION METER

23 CAMRY (LHD)

(Cont. next page)

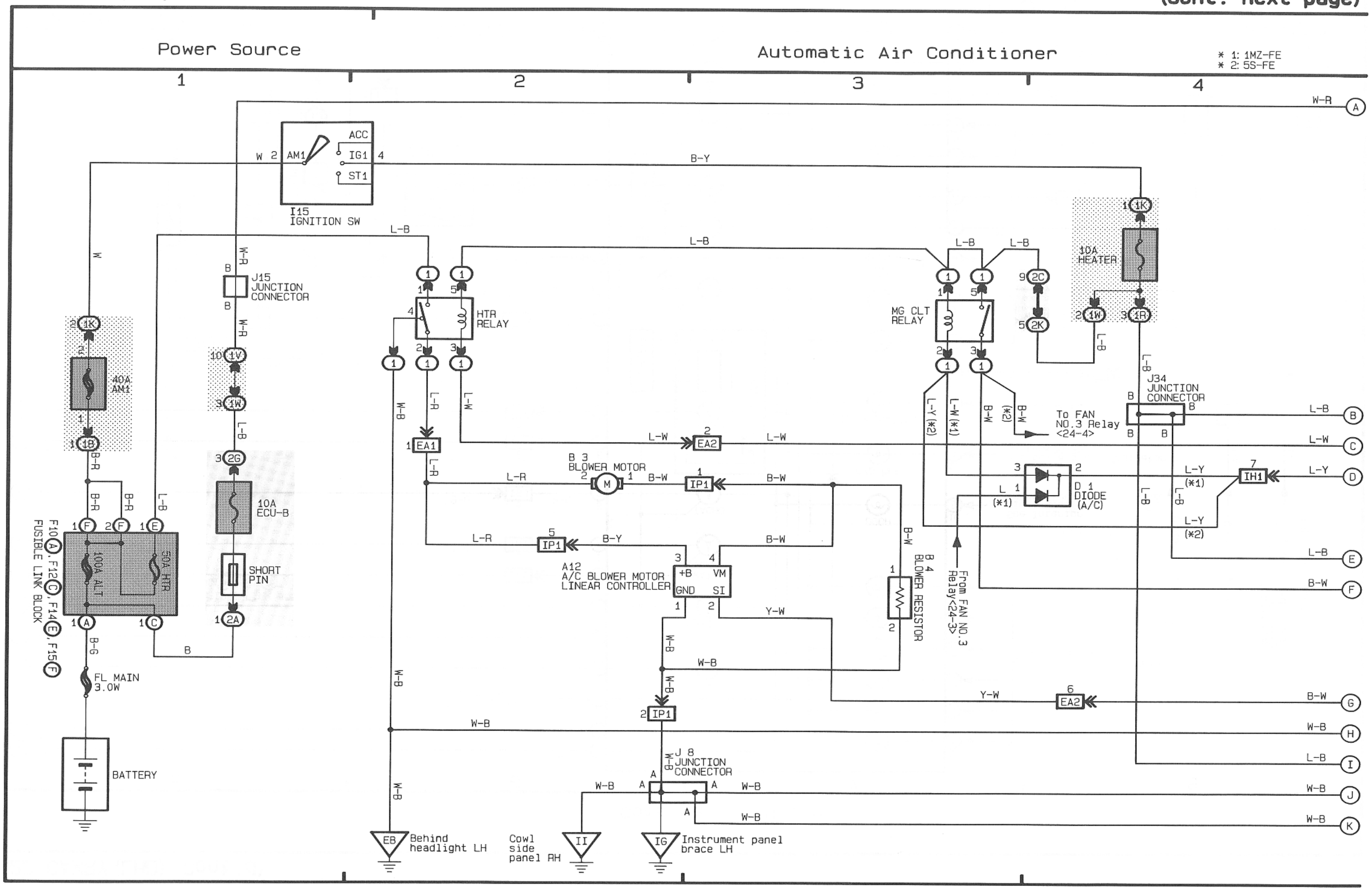

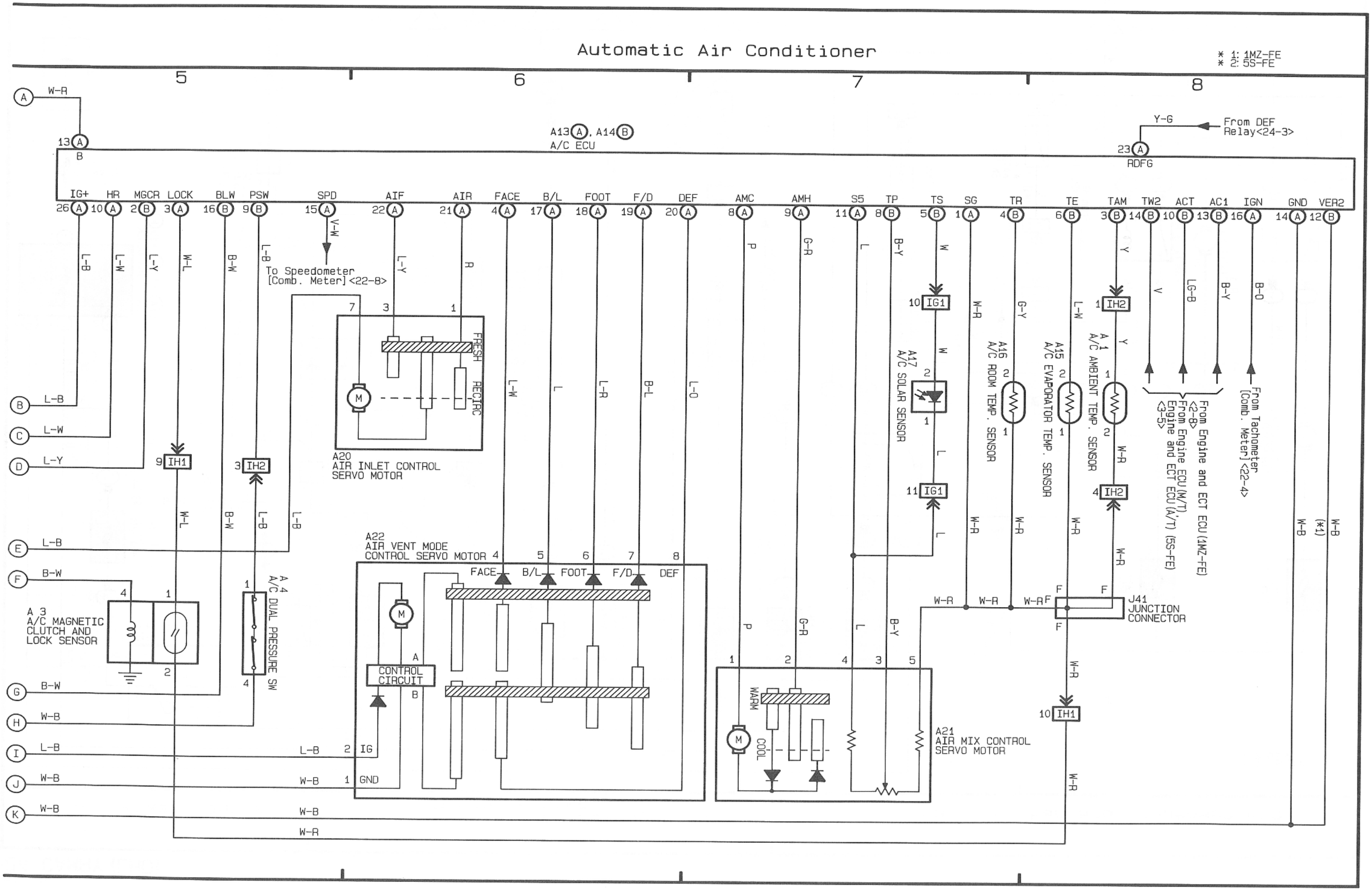
Automatic Air Conditioner
* 1: 1MZ-FE
* 2: 5S-FE
A13 (A), A14 (B)
A/C ECU
From DEF Relay<24-3>
IG+ HR MGCR LOCK BLW PSW SPD AIF AIR FACE B/L FOOT F/D DEF AMC AMH S5 TP TS SG TR TE TAM TW2 ACT AC1 IGN GND VER2
To Speedometer [Comb. Meter]<22-8>
A20 AIR INLET CONTROL SERVO MOTOR
FRESH
RECIRC
A22 AIR VENT MODE CONTROL SERVO MOTOR
CONTROL CIRCUIT
A 3 A/C MAGNETIC CLUTCH AND LOCK SENSOR
A 4 A/C DUAL PRESSURE SW
A17 A/C SOLAR SENSOR
A16 A/C ROOM TEMP. SENSOR
A15 A/C EVAPORATOR TEMP. SENSOR
A 1 A/C AMBIENT TEMP. SENSOR
From Engine and ECT ECU (1MZ-FE) <2-8>
From Engine ECU (M/T), Engine and ECT ECU (A/T) (5S-FE) <3-5>
From Tachometer [Comb. Meter]<22-4>
J41 JUNCTION CONNECTOR
A21 AIR MIX CONTROL SERVO MOTOR
WARM
COOL
IG
GND

24 CAMRY (LHD)

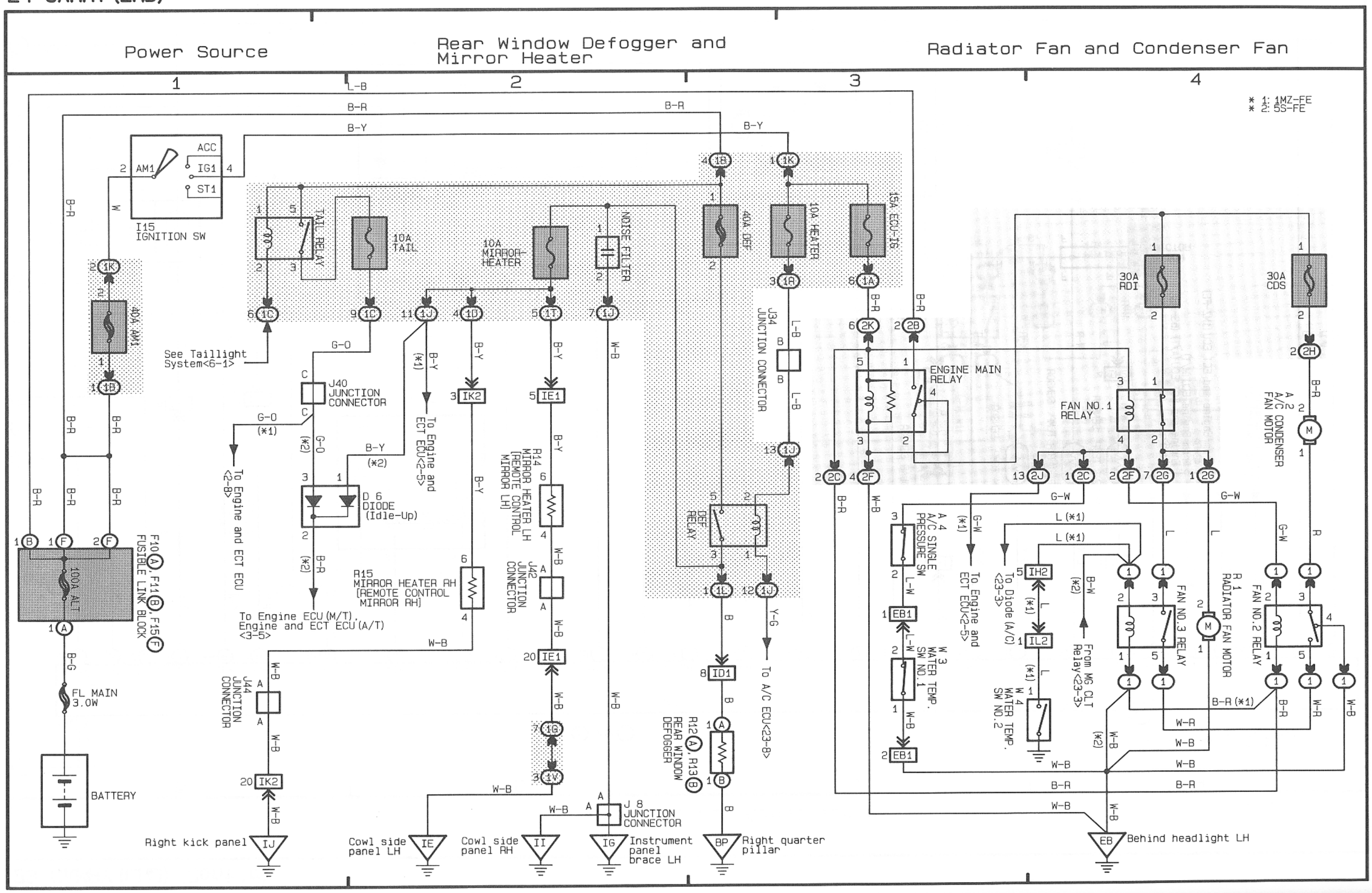
Power Source
Rear Window Defogger and Mirror Heater
Radiator Fan and Condenser Fan
1
2
3
4
* 1: 1MZ-FE
* 2: 5S-FE
I15 IGNITION SW
ACC
IG1
ST1
AM1
TAIL RELAY
10A TAIL
10A MIRROR-HEATER
NOISE FILTER
40A DEF
10A HEATER
15A ECU-IG
40A AM1
See Taillight System<6-1>
J40 JUNCTION CONNECTOR
D 6 DIODE (Idle-Up)
To Engine and ECT ECU<2-5>
To Engine and ECT ECU<2-8>
To Engine ECU(M/T), Engine and ECT ECU(A/T) <3-5>
R15 MIRROR HEATER RH [REMOTE CONTROL MIRROR RH]
R14 MIRROR HEATER LH [REMOTE CONTROL MIRROR LH]
J42 JUNCTION CONNECTOR
J44 JUNCTION CONNECTOR
J34 JUNCTION CONNECTOR
F10 (A), F11 (B), F15 (F)
FUSIBLE LINK BLOCK
100A ALT
FL MAIN 3.0W
BATTERY
DEF RELAY
To A/C ECU<23-8>
R12 (A), R13 (B) REAR WINDOW DEFOGGER
J 8 JUNCTION CONNECTOR
Right kick panel
Cowl side panel LH
Cowl side panel RH
Instrument panel brace LH
Right quarter pillar
30A RDI
30A CDS
ENGINE MAIN RELAY
FAN NO.1 RELAY
A 2 A/C CONDENSER FAN MOTOR
A 4 A/C SINGLE PRESSURE SW
W 3 WATER TEMP. SW NO.1
W 4 WATER TEMP. SW NO.2
To Diode (A/C) <23-3>
From MG CLT Relay<23-3>
FAN NO.3 RELAY
FAN NO.2 RELAY
R 1 RADIATOR FAN MOTOR
Behind headlight LH

TOYOTA
QUALITY SERVICE

OVERSEAS SERVICE DIVISION
TOYOTA MOTOR CORPORATION

PRINTED IN JAPAN